SGM330A
Quad, Wide-Bandwidth SPDT Video Analog Switch

GENERAL DESCRIPTION

The SGM330A is a quad, bidirectional, single-pole/double-throw (SPDT), TTL/CMOS compatible video analog switch. It operates from a 2.7V to 5.5V single power supply. The SGM330A features low crosstalk, low on-resistance and fast switching times.

The SGM330A also has the advantages of high current and wide bandwidth (500MHz). The high performances make it very suitable for high frequency applications, such as video editors, audio and video signal routing, etc. In addition, low cost is also one of the important reasons that make the SGM330A a good choice.

The SGM330A is available in Green SOIC-16, TSSOP-16 and SSOP-16 packages. It operates over an ambient temperature range of -40℃ to +85℃.

FEATURES

- **Single Supply Voltage Range: 2.7V to 5.5V**
- **-3dB Bandwidth: 500MHz**
- **Low On-Resistance: 15Ω (TYP)**
- **Low Crosstalk: -60dB (TYP) at 10MHz**
- **Off-Isolation: -58dB at 10MHz**
- **Power Consumption: I_{CC} = 0.1μA (TYP)**
- **Rail-to-Rail Input and Output Operation**
- **Fast Switching Times**
- **TTL/CMOS Compatible**
- **-40℃ to +85℃ Operating Temperature Range**
- **Available in Green SOIC-16, TSSOP-16 and SSOP-16 Packages**

APPLICATIONS

Digital VCRs
Video Editors
Re-Recordable DVD
Video/TV Game Players
Computer Peripherals
Personal Digital Assistants
Audio and Video Signal Routing
Battery-Powered Systems

PACKAGE/ORDERING INFORMATION

MODEL	PACKAGE DESCRIPTION	SPECIFIED TEMPERATURE RANGE	ORDERING NUMBER	PACKAGE MARKING	PACKING OPTION
SGM330A	SOIC-16	-40℃ to +85℃	SGM330A-YS/TR	SGM330A-YS XXXXX	Tape and Reel, 2500
	SSOP-16	-40℃ to +85℃	SGM330A-YQS/TR	SGM330A -YQS XXXXX	Tape and Reel, 3000
	TSSOP-16	-40℃ to +85℃	SGM330A-YTS/TR	SGM330A -YTS XXXXX	Tape and Reel, 3000

MARKING INFORMATION

NOTE: XXXXX = Date Code and Vendor Code.

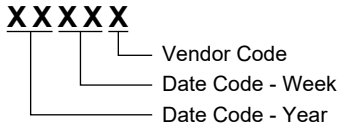

Green (RoHS & HSF): SG Micro Corp defines "Green" to mean Pb-Free (RoHS compatible) and free of halogen substances. If you have additional comments or questions, please contact your SGMICRO representative directly.

ABSOLUTE MAXIMUM RATINGS

V_+ to GND ..... -0.3V to 6V
D_A, D_B, D_C, D_D to GND ..... -0.3V to 6V
DC Input Voltage ..... -0.3V to 6V
Package Thermal Resistance
SOIC-16, θ_{JA} ..... 82℃/W
TSSOP-16, θ_{JA} ..... 100℃/W
SSOP-16, θ_{JA} ..... 103℃/W
Junction Temperature ..... +150℃
Storage Temperature Range ..... -65℃ to +150℃
Lead Temperature (Soldering, 10s) ..... +260℃
ESD Susceptibility
HBM 8000V
MM 400V

RECOMMENDED OPERATING CONDITIONS

Operating Temperature Range ..... -40℃ to +85℃

OVERSTRESS CAUTION

Stresses beyond those listed in Absolute Maximum Ratings may cause permanent damage to the device. Exposure to absolute maximum rating conditions for extended periods may affect reliability. Functional operation of the device at any conditions beyond those indicated in the Recommended Operating Conditions section is not implied.

ESD SENSITIVITY CAUTION

This integrated circuit can be damaged if ESD protections are not considered carefully. SGMICRO recommends that all integrated circuits be handled with appropriate precautions. Failure to observe proper handling and installation procedures can cause damage. ESD damage can range from subtle performance degradation to complete device failure. Precision integrated circuits may be more susceptible to damage because even small parametric changes could cause the device not to meet the published specifications.

DISCLAIMER

SG Micro Corp reserves the right to make any change in circuit design, or specifications without prior notice.

PIN CONFIGURATION

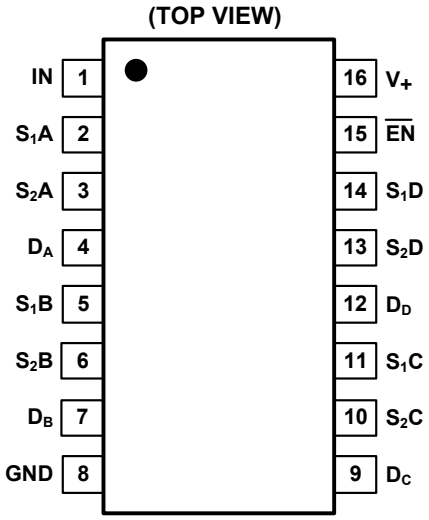

SSOP-16/SOIC-16/TSSOP-16

PIN DESCRIPTION

PIN	NAME	FUNCTION
1	IN	Select Input Pin.
2, 5, 11, 14, 3, 6, 10, 13	S_1A, S_1B, S_1C, S_1D, S_2A, S_2B, S_2C, S_2D	Source Terminal, I/O.
4, 7, 9, 12	D_A, D_B, D_C, D_D	Drain Terminal, I/O.
8	GND	Ground.
15	$\overline{EN}$	Digital Enable Input Pin.
16	V_+	Positive Power Supply.

FUNCTION TABLE

$\overline{EN}$	IN	ON SWITCH
0	0	S_1A, S_1B, S_1C, S_1D
0	1	S_2A, S_2B, S_2C, S_2D
1	X	Disabled

ELECTRICAL CHARACTERISTICS

(At V_+ = 5V±10%, T_A = +25℃, unless otherwise noted.)

PARAMETER	SYMBOL	CONDITIONS	MIN	TYP	MAX	UNITS
Input Voltage Range	V_{IN}		0		V_+	V
DC Characteristics						
On-Resistance	R_{ON}	0V ≤ V_{S1} or V_{S2} ≤ V_+, I_D = 13mA		15	19	Ω
Input High Voltage	V_{IH}		2			V
Input Low Voltage	V_{IL}				0.6	V
Input High Current	I_{IH}	V_+ = 5.5V, V_{IN} and V_{EN} = V_+			±1	μA
Input Low Current	I_{IL}	V_+ = 5.5V, V_{IN} and V_{EN} = 0V			±1	μA
Analog Output Leakage Current	I_O	V_+ = 5.5V, V_{S1} or V_{S2} = 3.3V/0.3V, V_D = 0.3V/3.3V			±1	μA
Clamp Diode Voltage	V_{IK}	I_{IN} = -18mA		-1		V
Dynamic Characteristics						
Turn-On Time	t_{ON}	R_L = 75Ω, C_L = 20pF, See Figure 1		45		ns
Turn-Off Time	t_{OFF}	R_L = 75Ω, C_L = 20pF, See Figure 1		25		ns
Propagation Delay Time	t_{PD}	R_L = 75Ω, C_L = 20pF		1.5		ns
Off-Isolation	O_{IRR}	R_L = 50Ω, f = 10MHz, See Figure 5		-58		dB
Channel-to-Channel Crosstalk	X_{TALK}	R_{IN} = 10Ω, R_L = 50Ω, f = 10MHz, See Figure 4		-60		dB
-3dB Bandwidth	BW	R_L = 50Ω, See Figure 3		500		MHz
Input/Enable Capacitance	C_{IN}	f = 1MHz		4		pF
Switch OFF Capacitance	C_{OFF}	f = 1MHz		4		pF
Switch ON Capacitance	C_{ON}	f = 1MHz		8		pF
Differential Gain	D_G	R_L = 50Ω, f = 3.58MHz, See Figure 2		0.5		%
Differential Phase	D_P	R_L = 50Ω, f = 3.58MHz, See Figure 2		0.03		°
Power Requirements						
Power Supply Range	V_+		2.7		5.5	V
Power Supply Current	I_{CC}	V_+ = 5.5V, V_{IN} and V_{EN} = 5V/0V		0.1	20	μA
Supply Current per Input @ TTL HIGH	Δ_{ICC}	V_+ = 5.5V, V_{IN} or V_{EN} = 3.4V			300	μA

ELECTRICAL CHARACTERISTICS (continued)

(At V_+ = 3V±10%, T_A = +25℃, unless otherwise noted.)

PARAMETER	SYMBOL	CONDITIONS	MIN	TYP	MAX	UNITS
Input Voltage Range	V_{IN}		0		V_+	V
DC Characteristics						
On-Resistance	R_{ON}	0V ≤ V_{S1} or V_{S2} ≤ V_+, I_D = 13mA		35	50	Ω
Input High Voltage	V_{IH}		2			V
Input Low Voltage	V_{IL}				0.4	V
Input High Current	I_{IH}	V_+ = 3.3V, V_{IN} and V_{EN} = V_+			±1	μA
Input Low Current	I_{IL}	V_+ = 3.3V, V_{IN} and V_{EN} = 0V			±1	μA
Analog Output Leakage Current	I_O	V_+ = 3.3V, V_{S1} or V_{S2} = 3.3V/0.3V, V_D = 0.3V/3.3V			±1	μA
Clamp Diode Voltage	V_{IK}	I_{IN} = -18mA		-1		V
Dynamic Characteristics						
Turn-On Time	t_{ON}	R_L = 75Ω, C_L = 20pF, See Figure 1		75		ns
Turn-Off Time	t_{OFF}	R_L = 75Ω, C_L = 20pF, See Figure 1		55		ns
Propagation Delay Time	t_{PD}	R_L = 75Ω, C_L = 20pF		1.5		ns
Power Requirements						
Power Supply Current	I_{CC}	V_+ = 3.3V, V_{IN} and V_{EN} = 5V/0V		0.1	20	μA
Supply Current per Input @ TTL HIGH	Δ_{ICC}	V_+ = 3.3V, V_{IN} or V_{EN} = 0.8V			300	μA

TYPICAL PERFORMANCE CHARACTERISTICS

T_A = +25℃, V_+ = 5V, unless otherwise noted.

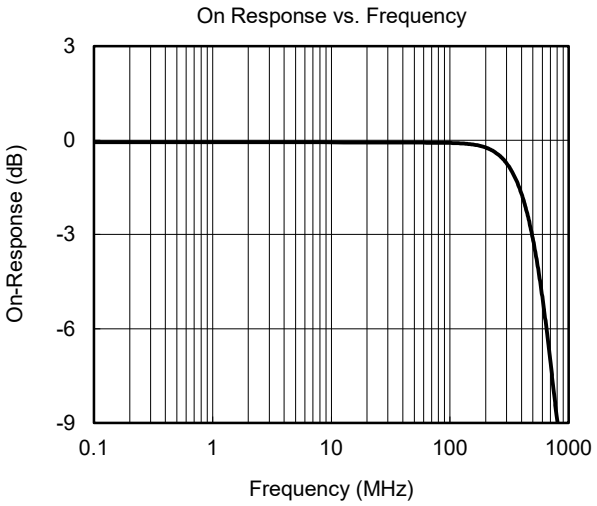

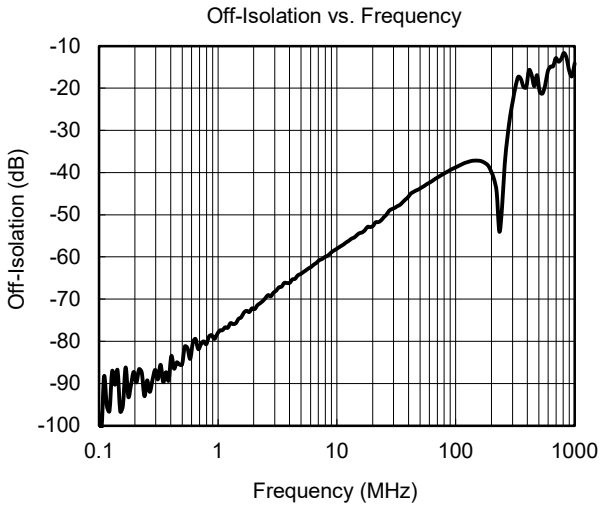

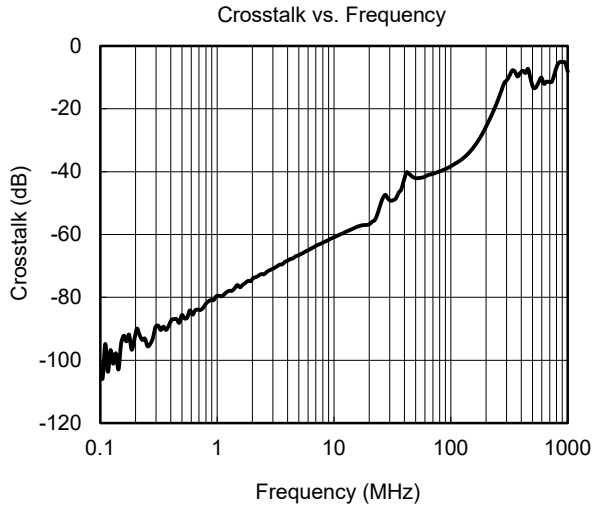

TEST CIRCUITS

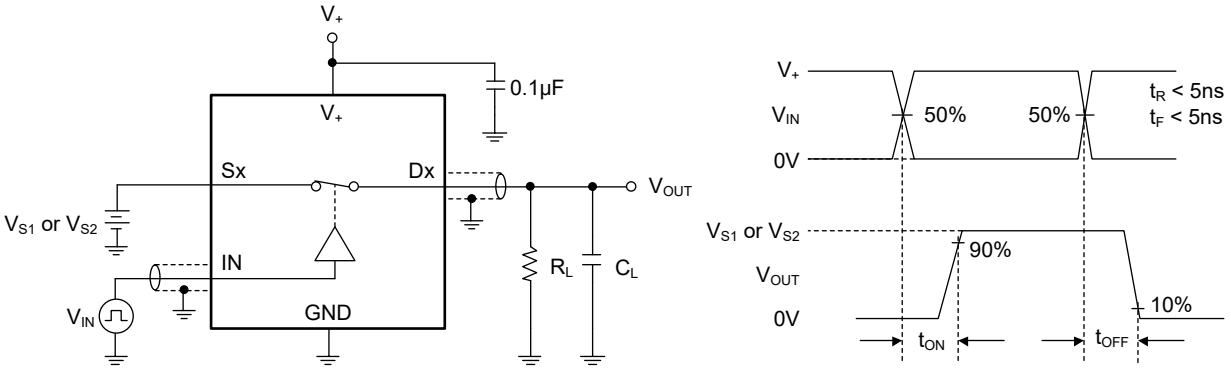

Test	V_+	R_L	C_L	V_{S1}	V_{S2}
t_{ON}	5V±0.5V	75Ω	20pF	GND	3V
	5V±0.5V	75Ω	20pF	3V	GND
t_{OFF}	5V±0.5V	75Ω	20pF	GND	3V
	5V±0.5V	75Ω	20pF	3V	GND

Figure 1. Test Circuit for Voltage Waveform and Switch Time

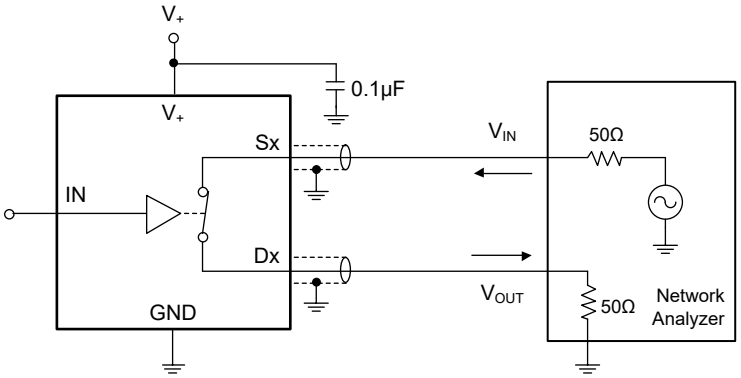

Figure 2. Test Circuit for Differential Gain/Phase Measurement

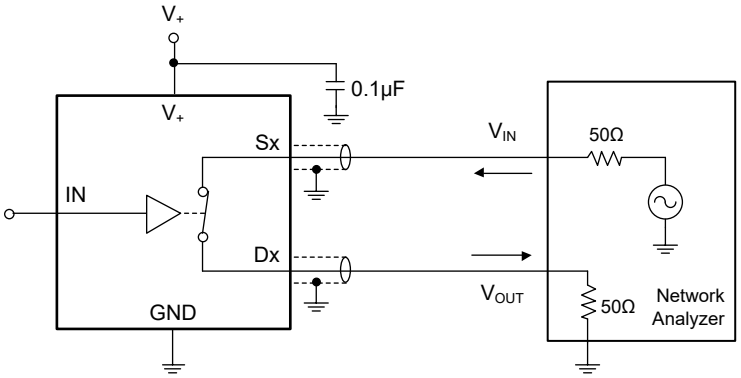

Figure 3. Test Circuit for Frequency Response (BW)

TEST CIRCUITS (continued)

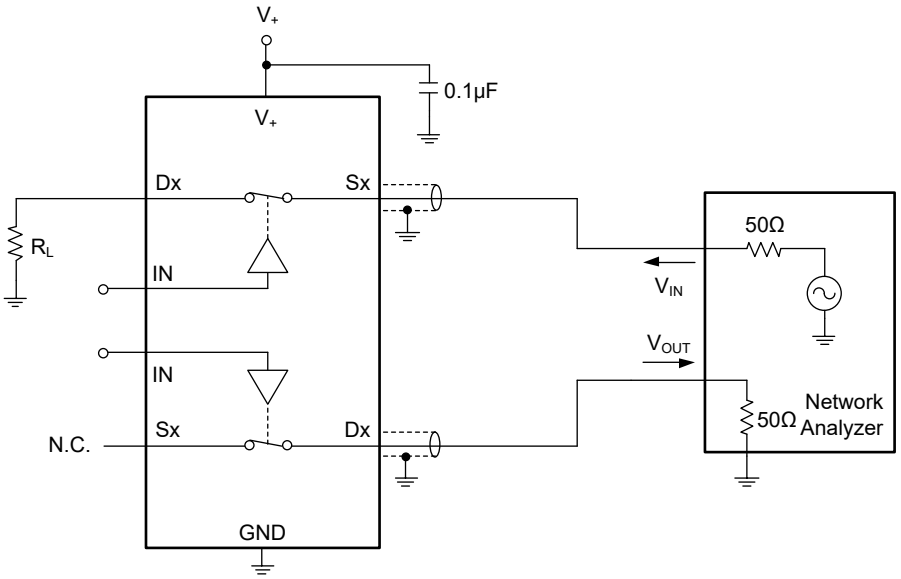

Channel-to-Channel Crosstalk = 20log(V_{OUT}/V_{IN})

Figure 4. Test Circuit for Crosstalk (X_{TALK})

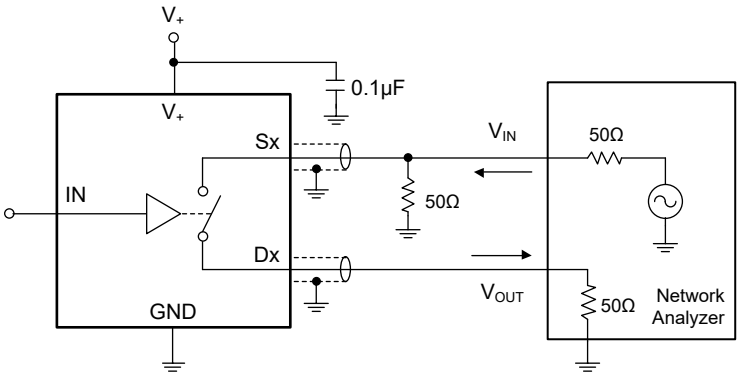

Figure 5. Test Circuit for Off-Isolation (O_{IRR})

REVISION HISTORY

NOTE: Page numbers for previous revisions may differ from page numbers in the current version.

APRIL 2023 – REV.B.4 to REV.C	Page
Updated Electrical Characteristics section	4, 5
Updated Test Circuits	7, 8

JANUARY 2017 – REV.B.3 to REV.B.4	Page
Changed Power Supply Voltage Range to 2.7V to 5.5V	All

SEPTEMBER 2013 – REV.B.2 to REV.B.3	Page
Updated Electrical Characteristics section	3

JANUARY 2013 – REV.B.1 to REV.B.2	Page
Added Tape and Reel Information	14, 15

MAY 2011 – REV.A to REV.B.1	Page
Changed Caution	2

Changes from Original (DECEMBER 2008) to REV.A	Page
Changed from product preview to production data	All

PACKAGE OUTLINE DIMENSIONS

SOIC-16

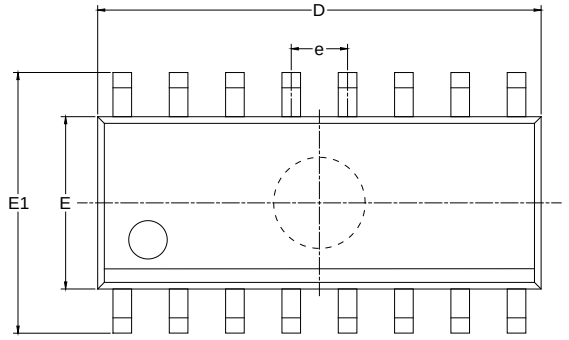

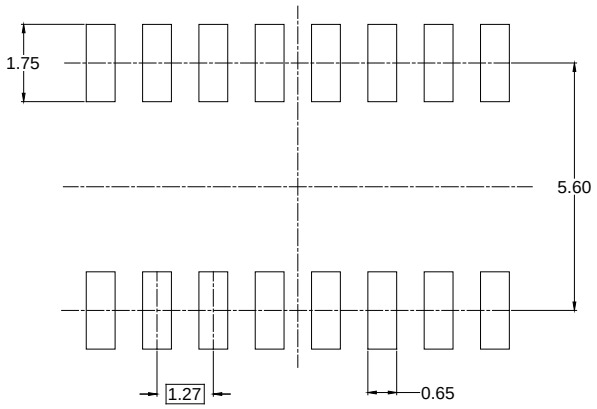

RECOMMENDED LAND PATTERN (Unit: mm)

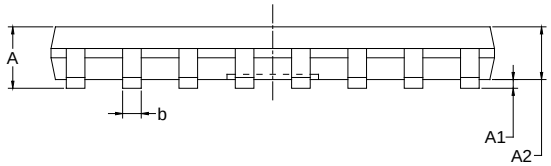

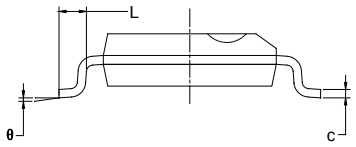

Symbol	Dimensions In Millimeters		Dimensions In Inches	
	MIN	MAX	MIN	MAX
A	1.350	1.750	0.053	0.069
A1	0.100	0.250	0.004	0.010
A2	1.350	1.550	0.053	0.061
b	0.330	0.510	0.013	0.020
c	0.170	0.250	0.006	0.010
D	9.800	10.200	0.386	0.402
E	3.800	4.000	0.150	0.157
E1	5.800	6.200	0.228	0.244
e	1.27 BSC		0.050 BSC	
L	0.400	1.270	0.016	0.050
θ	0°	8°	0°	8°

NOTES:
1. Body dimensions do not include mode flash or protrusion.
2. This drawing is subject to change without notice.

PACKAGE OUTLINE DIMENSIONS

SSOP-16

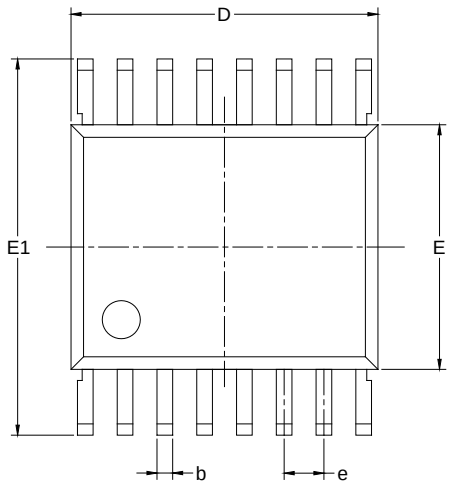

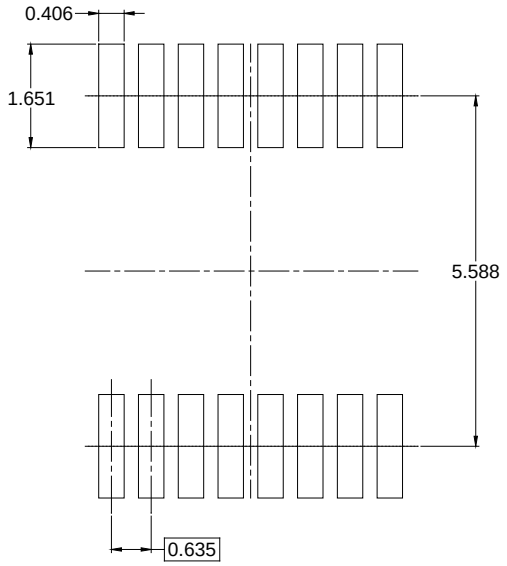

RECOMMENDED LAND PATTERN (Unit: mm)

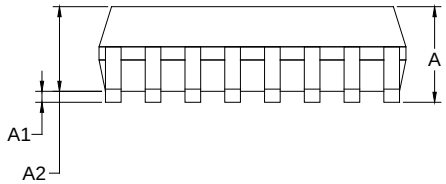

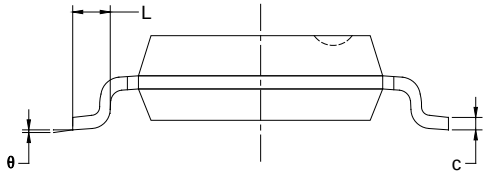

Symbol	Dimensions In Millimeters		Dimensions In Inches	
	MIN	MAX	MIN	MAX
A	1.350	1.750	0.053	0.069
A1	0.100	0.250	0.004	0.010
A2	1.350	1.550	0.053	0.061
b	0.200	0.300	0.008	0.012
c	0.170	0.250	0.007	0.010
D	4.700	5.100	0.185	0.200
E	3.800	4.000	0.150	0.157
E1	5.800	6.200	0.228	0.244
e	0.635 BSC		0.025 BSC	
L	0.400	1.270	0.016	0.050
θ	0°	8°	0°	8°

NOTES:
1. Body dimensions do not include mode flash or protrusion.
2. This drawing is subject to change without notice.

PACKAGE OUTLINE DIMENSIONS

TSSOP-16

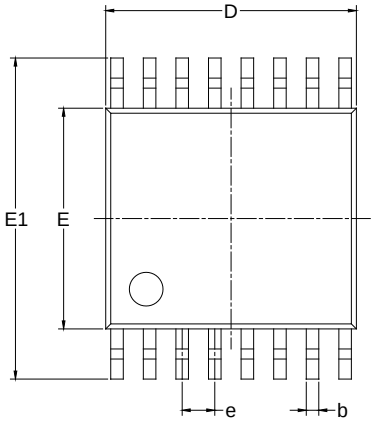

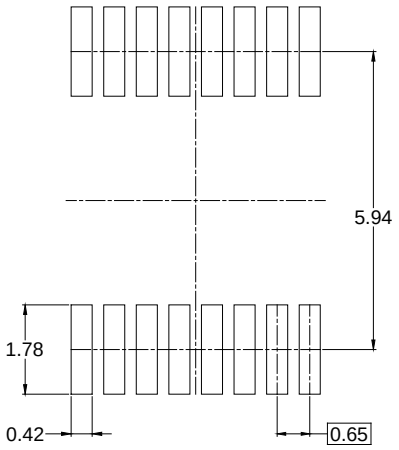

RECOMMENDED LAND PATTERN (Unit: mm)

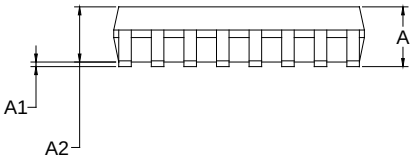

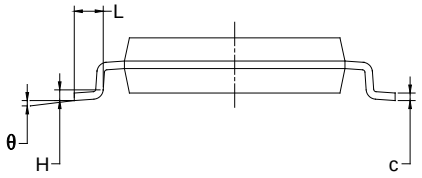

Symbol	Dimensions In Millimeters		Dimensions In Inches	
	MIN	MAX	MIN	MAX
A		1.200		0.047
A1	0.050	0.150	0.002	0.006
A2	0.800	1.050	0.031	0.041
b	0.190	0.300	0.007	0.012
c	0.090	0.200	0.004	0.008
D	4.860	5.100	0.191	0.201
E	4.300	4.500	0.169	0.177
E1	6.200	6.600	0.244	0.260
e	0.650 BSC		0.026 BSC	
L	0.500	0.700	0.02	0.028
H	0.25 TYP		0.01 TYP	
θ	1°	7°	1°	7°

NOTES:
1. Body dimensions do not include mode flash or protrusion.
2. This drawing is subject to change without notice.

TAPE AND REEL INFORMATION

REEL DIMENSIONS

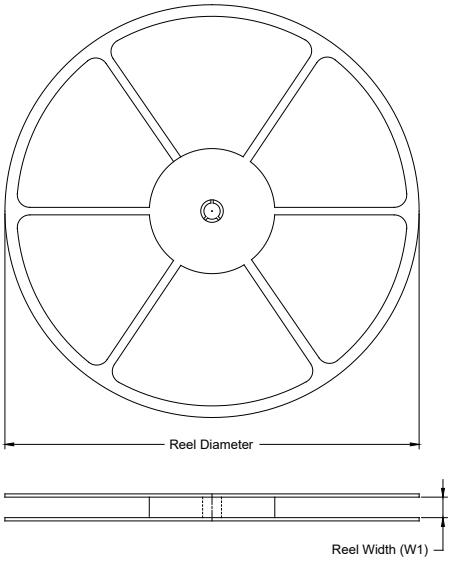

TAPE DIMENSIONS

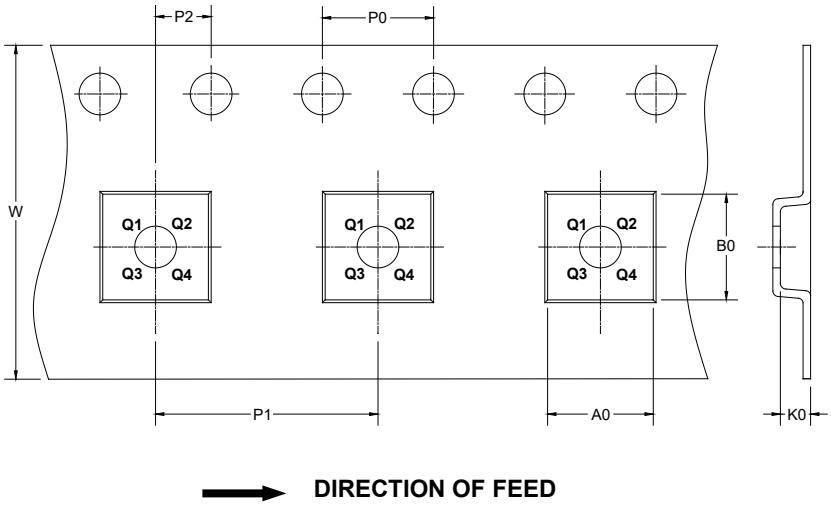

NOTE: The picture is only for reference. Please make the object as the standard.

KEY PARAMETER LIST OF TAPE AND REEL

Package Type	Reel Diameter	Reel Width W1 (mm)	A0 (mm)	B0 (mm)	K0 (mm)	P0 (mm)	P1 (mm)	P2 (mm)	W (mm)	Pin1 Quadrant
SOIC-16	13″	16.4	6.50	10.30	2.10	4.0	8.0	2.0	16.0	Q1
SSOP-16	13″	12.4	6.40	5.40	2.10	4.0	8.0	2.0	12.0	Q1
TSSOP-16	13″	12.4	6.80	5.40	1.50	4.0	8.0	2.0	12.0	Q1

DD0001

CARTON BOX DIMENSIONS

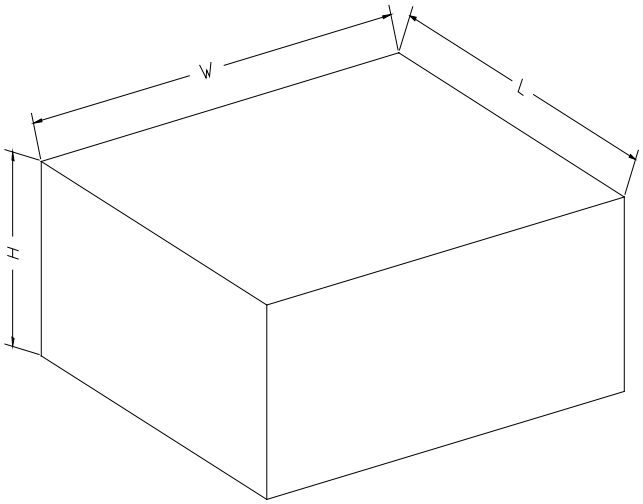

NOTE: The picture is only for reference. Please make the object as the standard.

KEY PARAMETER LIST OF CARTON BOX

Reel Type	Length (mm)	Width (mm)	Height (mm)	Pizza/Carton
13″	386	280	370	5

DD0002