SGM7227
High Speed USB 2.0 (480Mbps) DPDT Analog Switch

GENERAL DESCRIPTION

The SGM7227 is a DPDT (double-pole/double-throw) analog switch. It operates from a 1.8V to 4.3V single power supply. Each switch of the SGM7227 is bidirectional, which can ensure that the high speed signals have little or no attenuation at the outputs.

The SGM7227 features high speed, low power and wide bandwidth. The high performances make it very suitable for multiple applications, such as cellular phones and computer peripherals, etc.

The SGM7227 has a power-off protection. It can prevent accidental signal leakage and ensure system reliability under power-down and over-voltage conditions. In addition, the device is capable of withstanding a V_{BUS} short to D+ or D- when the device is either powered on or powered off because of the special circuitry on the D+/D- pins.

SGM7227 is available in Green UTQFN-1.8×1.4-10L and MSOP-10 packages. It operates over an ambient temperature range of -40℃ to +85℃.

FEATURES

- **Supply Voltage Range: 1.8V to 4.3V**
- **On-Resistance: 5Ω (TYP) at 3.0V**
- **High Off-Isolation: -51dB (R_L = 50Ω, f = 250MHz)**
- **Low Crosstalk: -26dB (R_L = 50Ω, f = 250MHz)**
- **-3dB Bandwidth: 500MHz**
- **Fast Switching Times at V_{CC} = 3.3V:**
  t_{ON} = 20ns (TYP)
  t_{OFF} = 18ns (TYP)
- **Break-Before-Make Switching**
- **Rail-to-Rail Input and Output Operation**
- **Power-Off and Power-On Protections**
- **-40℃ to +85℃ Operating Temperature Range**
- **Available in Green UTQFN-1.8×1.4-10L and MSOP-10 Packages**

APPLICATIONS

Cellular Phones
Digital Cameras
Portable Equipment
Computer Peripherals
Battery-Powered Systems
Routes Signals for USB 2.0 Full-Speed

PACKAGE/ORDERING INFORMATION

MODEL	PACKAGE DESCRIPTION	SPECIFIED TEMPERATURE RANGE	ORDERING NUMBER	PACKAGE MARKING	PACKING OPTION
SGM7227	MSOP-10	-40℃ to +85℃	SGM7227YMS10G/TR	SGM7227 YMS10 XXXXX	Tape and Reel, 3000
	UTQFN-1.8×1.4-10L	-40℃ to +85℃	SGM7227YUWQ10G/TR	7227	Tape and Reel, 3000

MARKING INFORMATION

NOTE: XXXXX = Date Code and Vendor Code.

MSOP-10

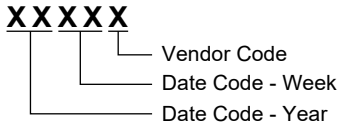

Green (RoHS & HSF): SG Micro Corp defines "Green" to mean Pb-Free (RoHS compatible) and free of halogen substances. If you have additional comments or questions, please contact your SGMICRO representative directly.

ABSOLUTE MAXIMUM RATINGS

V_{CC} to GND ..... 0V to 4.6V
Analog, Digital Voltage Range ..... -0.3V to (V_{CC} + 0.3V)
Continuous Current HSDn or Dn ..... ±50mA
Peak Current HSDn or Dn ..... ±100mA
Junction Temperature ..... +150℃
Storage Temperature Range ..... -65℃ to +150℃
Lead Temperature (Soldering, 10s) ..... +260℃
ESD Susceptibility
HBM 8000V
MM 400V

RECOMMENDED OPERATING CONDITIONS

Operating Temperature Range ..... -40℃ to +85℃

OVERSTRESS CAUTION

Stresses beyond those listed in Absolute Maximum Ratings may cause permanent damage to the device. Exposure to absolute maximum rating conditions for extended periods may affect reliability. Functional operation of the device at any conditions beyond those indicated in the Recommended Operating Conditions section is not implied.

ESD SENSITIVITY CAUTION

This integrated circuit can be damaged if ESD protections are not considered carefully. SGMICRO recommends that all integrated circuits be handled with appropriate precautions. Failure to observe proper handling and installation procedures can cause damage. ESD damage can range from subtle performance degradation to complete device failure. Precision integrated circuits may be more susceptible to damage because even small parametric changes could cause the device not to meet the published specifications.

DISCLAIMER

SG Micro Corp reserves the right to make any change in circuit design, or specifications without prior notice.

PIN CONFIGURATIONS

(TOP VIEW)

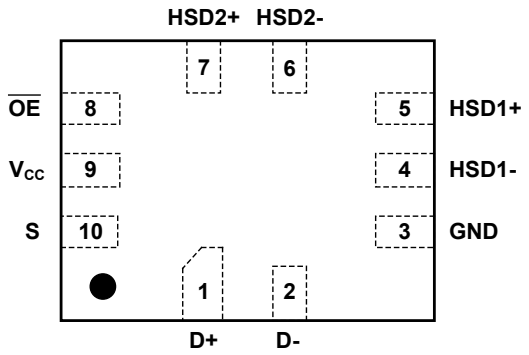

UTQFN-1.8×1.4-10L

(TOP VIEW)

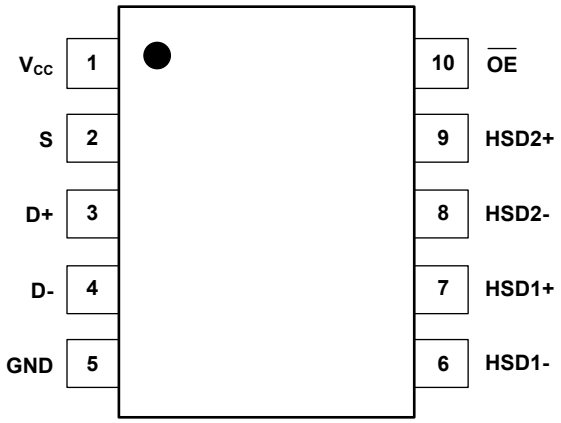

MSOP-10

PIN DESCRIPTION

PIN		NAME	FUNCTION
UTQFN-1.8×1.4-10L	MSOP-10		
1, 2	3, 4	D+, D-	Data Ports.
5, 4	7, 6	HSD1+, HSD1-	
7, 6	9, 8	HSD2+, HSD2-	
3	5	GND	Ground.
8	10	$\overline{OE}$	Output Enable Control Pin.
9	1	V_{CC}	Positive Power Supply Pin.
10	2	S	Select Input Pin.

BLOCK DIAGRAM

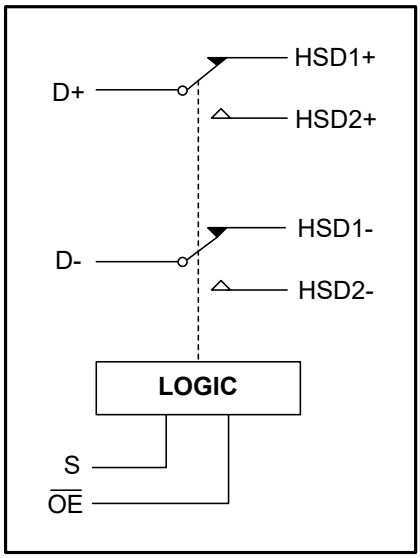

FUNCTION TABLE

$\overline{OE}$	S	HSD1+, HSD1-	HSD2+, HSD2-
0	0	ON	OFF
0	1	OFF	ON
1	*X*	OFF	OFF

NOTE: Switches shown for logic "0" input.

ELECTRICAL CHARACTERISTICS

(V_{CC} = +3.3V, Full = -40℃ to +85℃, typical values are at T_A = +25℃, unless otherwise noted.)

PARAMETER	SYMBOL	CONDITIONS	TEMP	MIN	TYP	MAX	UNITS
Analog Switch							
Analog I/O Voltage (HSD1+, HSD1-, HSD2+, HSD2-)	V_{IS}		Full	0		V_{CC}	V
On-Resistance	R_{ON}	V_{CC} = 3.0V, V_{IS} = 0V to 0.4V, I_D = 8mA, Test Circuit 1	+25℃		5	8	Ω
			Full			9	
On-Resistance Match Between Channels	ΔR_{ON}	V_{CC} = 3.0V, V_{IS} = 0V to 0.4V, I_D = 8mA, Test Circuit 1	+25℃		0.3	0.7	Ω
			Full			0.8	
On-Resistance Flatness	$R_{FLAT(ON)}$	V_{CC} = 3.0V, V_{IS} = 0V to 1.0V, I_D = 8mA, Test Circuit 1	+25℃		1	1.8	Ω
			Full			2	
Power Off Leakage Current (D+, D-)	I_{OFF}	V_{CC} = 0V, V_D = 0V to 3.6V, V_S , $V_{\overline{OE}}$ = 0V or 3.6 V	Full			1	μA
Increase in I_{CC} per Control Voltage	I_{CCT}	V_{CC} = 3.6V, V_S or $V_{\overline{OE}}$ = 2.6V	Full			5	μA
Source Off Leakage Current	$I_{HSD2(OFF)}$, $I_{HSD1(OFF)}$	V_{CC} = 3.6V, V_{IS} = 3.3V/ 0.3V, V_D = 0.3V/ 3.3V	Full			1	μA
Channel On Leakage Current	$I_{HSD2(ON)}$, $I_{HSD1(ON)}$	V_{CC} = 3.6V, V_{IS} = 3.3V/0.3V, V_D = 3.3V/0.3V or floating	Full			1	μA
Digital Inputs							
Input High Voltage	V_{IH}		Full	1.6			V
Input Low Voltage	V_{IL}		Full			0.3	V
Input Leakage Current	I_{IN}	V_{CC} = 3.0V, V_S , $V_{\overline{OE}}$ = 0V or V_{CC}	Full			1	μA
Dynamic Characteristics							
Turn-On Time	t_{ON}	V_{IS} = 0.8V, R_L = 50Ω, C_L = 10pF, Test Circuit 2	+25℃		20		ns
Turn-Off Time	t_{OFF}		+25℃		18		ns
Break-Before-Make Time Delay	t_D	V_{IS} = 0.8V, R_L = 50Ω, C_L = 10pF, Test Circuit 3	+25℃		4		ns
Propagation Delay	t_{PD}	R_L = 50Ω, C_L = 10pF	+25℃		0.5		ns
Off Isolation	O_{ISO}	Signal = 0dBm, R_L = 50Ω, f = 250MHz, Test Circuit 4	+25℃		-51		dB
Channel-to-Channel Crosstalk	X_{TALK}	Signal = 0dBm, R_L = 50Ω, f = 250MHz, Test Circuit 5	+25℃		-26		dB
-3dB Bandwidth	BW	Signal = 0dBm, R_L = 50Ω, C_L = 5pF, Test Circuit 6	+25℃		500		MHz
Channel-to-Channel Skew	t_{SKEW}	R_L = 50Ω, C_L = 10pF	+25℃		130		ps
Charge Injection Select Input to Common I/O	Q	V_G = GND, C_L = 1.0nF, R_G = 0Ω, Q = C_L × V_{OUT}, Test Circuit 7	+25℃		1.5		pC
HSD+, HSD-, D+, D- ON Capacitance	C_{ON}	f = 1MHz	+25℃		11		pF
Power Requirements							
Power Supply Range	V_{CC}		Full	1.8		4.3	V
Power Supply Current	I_{CC}	V_{CC} = 3.0V, V_S , $V_{\overline{OE}}$ = 0V or V_{CC}	Full			1	μA

TYPICAL PERFORMANCE CHARACTERISTICS

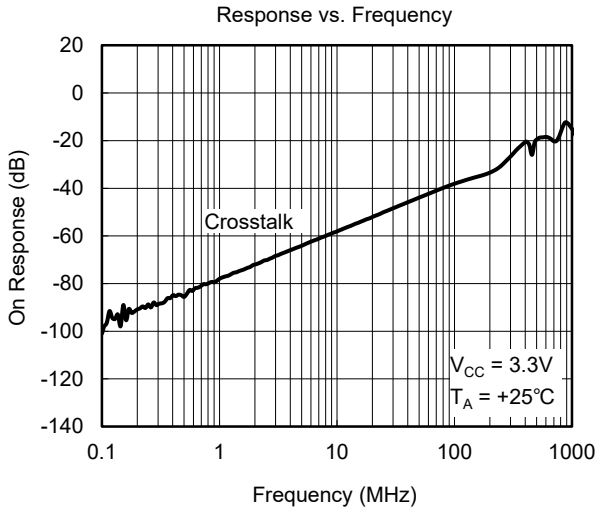

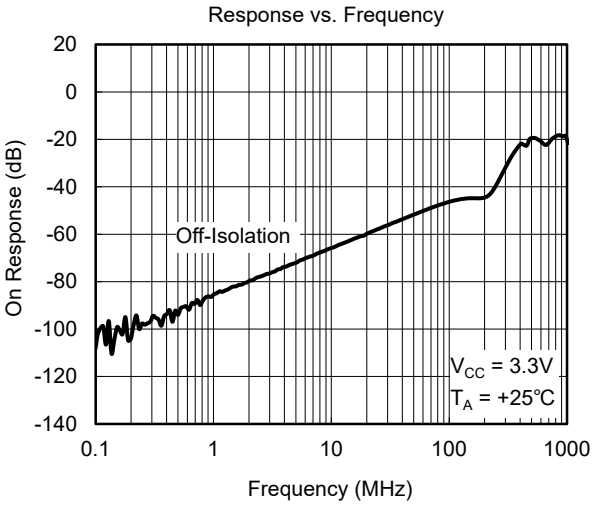

TEST CIRCUITS

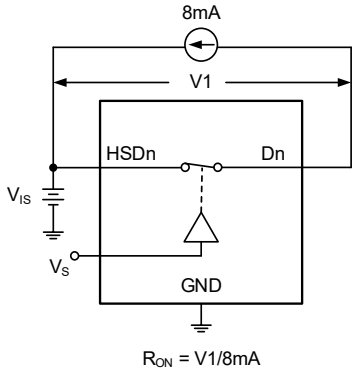

Test Circuit 1. On-Resistance

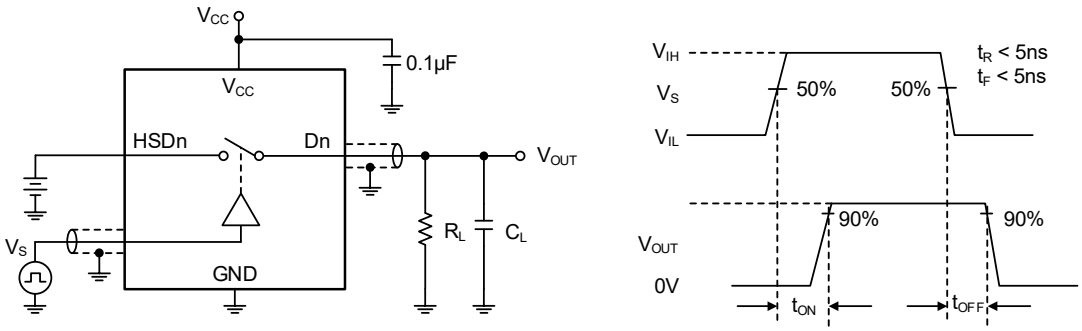

Test Circuit 2. Switching Times (t_{ON}, t_{OFF})

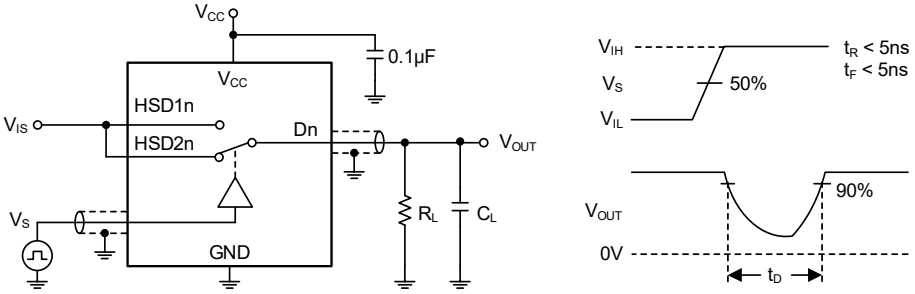

Test Circuit 3. Break-Before-Make Time (t_D)

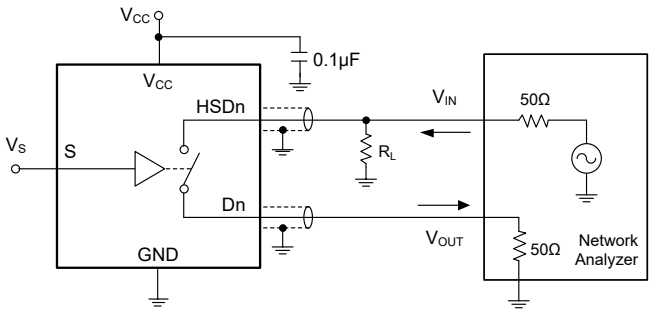

Test Circuit 4. Off Isolation

TEST CIRCUITS (continued)

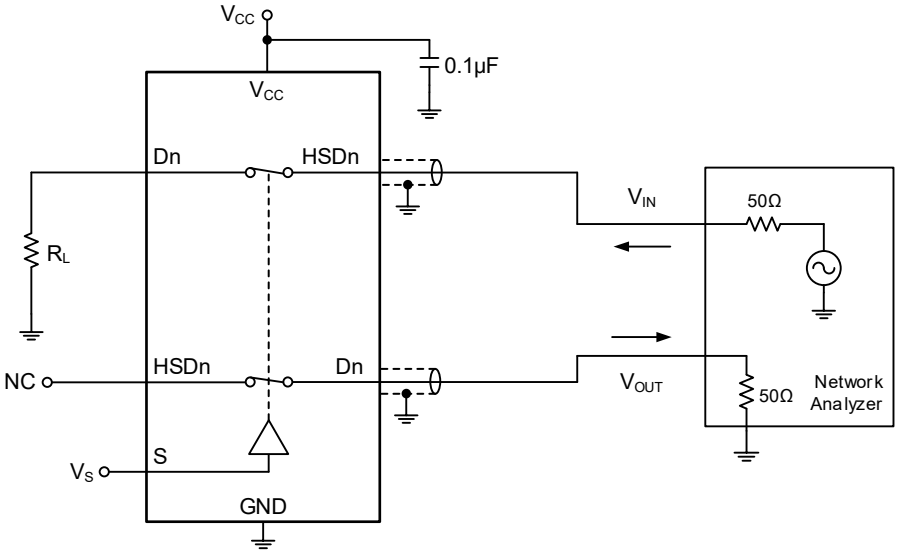

Channel-to-Channel Crosstalk = -20 log (V_{HSDn}/V_{OUT})

Test Circuit 5. Channel-to-Channel Crosstalk

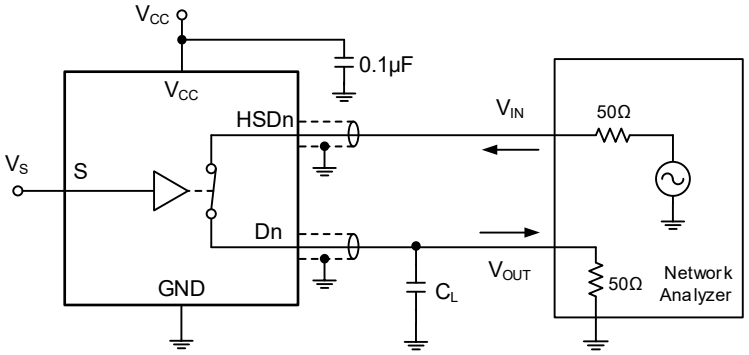

Test Circuit 6. -3dB Bandwidth

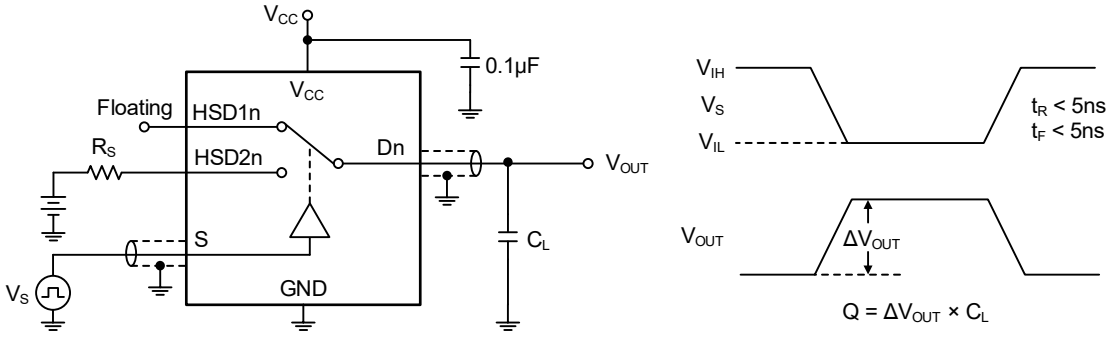

Test Circuit 7. Charge Injection (Q)

APPLICATION INFORMATION

Power-Off Protection

When D+ or D- is shorted to V_{BUS}, there is a special protection circuit inside the SGM7227, so that the device will not be damaged within 24 hours. In case of power-down or over-voltage event, the protection circuit can prevent the leakage signal on D+/D- pins to ensure the reliability of the system.

Power-On Protection

The USB 2.0 specification requires USB device to ensure that the device will not be damaged even if V_{BUS} short-circuit occurs during data transmission. Therefore, under over-voltage conditions, the SGM7227 will limit the current flowing back to the V_{CC} track, and the current will not exceed the safe operating range.

USB2.0 Signal Quality Compliance Test Results

The results of USB eye map test are shown in Figure 2 and Figure 3. The SGM7227 passes all the tests.

Required Tests

- Overall result:
  Pass!
- Signal eye:
  Eye passes
- EOP width: 7.91 bits
  EOP width passes
- Measured signaling rate: 480.0551MHz
  Signal rate passes
- Rising Edge Rate:
  901.28V/μs (710.10ps equivalent rise-time)
  Passes
- Falling Edge Rate:
  889.18V/μs (719.77ps equivalent rise-time)
  Passes

Additional Information

Consecutive jitter range:
-61.770ps to 39.668ps, RMS jitter 21.900ps

Paired JK jitter range:
-47.800ps to 42.890ps, RMS jitter 21.591ps

Paired KJ jitter range:
-50.590ps to 49.704ps, RMS jitter 23.281ps

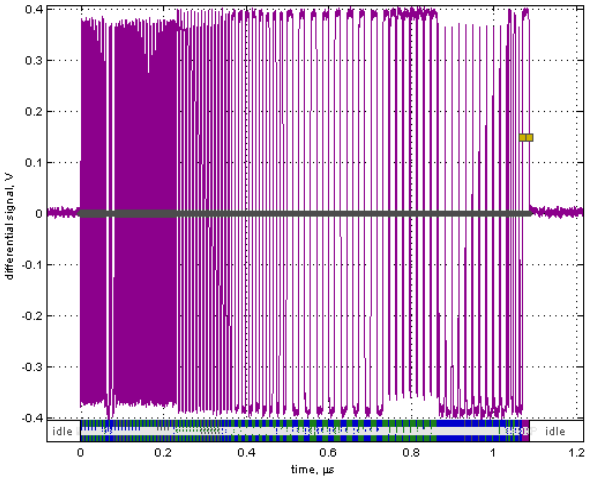

Figure 1. Waveform Plot

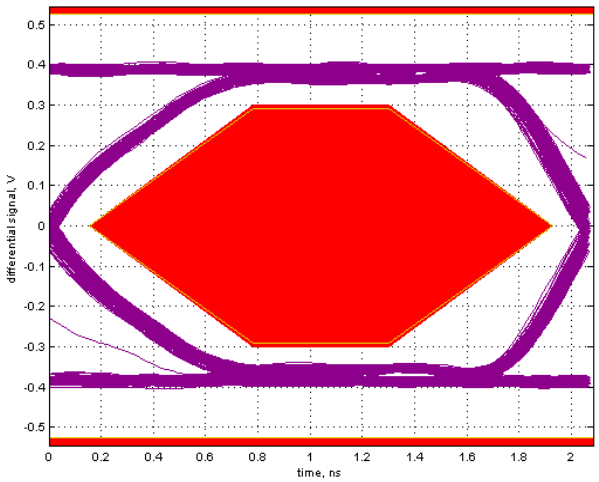

Figure 2. High-Speed Signal Quality Eye Diagram Test (V_{CC} = 3.3V)

REVISION HISTORY

NOTE: Page numbers for previous revisions may differ from page numbers in the current version.

MAY 2022 – REV.B to REV.B.1	Page
Updated ELECTRICAL CHARACTERISTICS section	5

JUNE 2021 – REV.A.4 to REV.B	Page
Updated Package Outline Dimensions section	10

MAY 2014 – REV.A.3 to REV.A.4	Page
Updated Absolute Maximum Ratings section	2

DECEMBER 2012 – REV.A.2 to REV.A.3	Page
Updated Absolute Maximum Ratings section	2

PACKAGE OUTLINE DIMENSIONS

UTQFN-1.8×1.4-10L

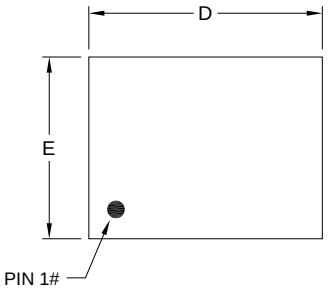

TOP VIEW

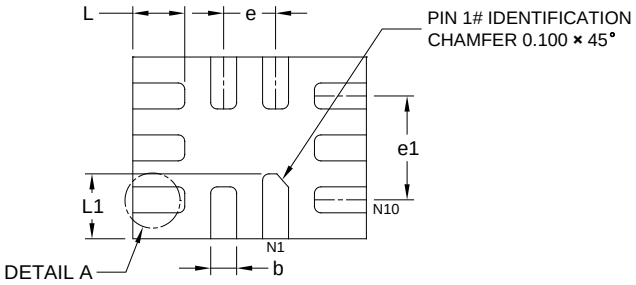

BOTTOM VIEW

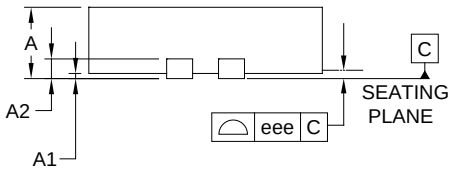

SIDE VIEW

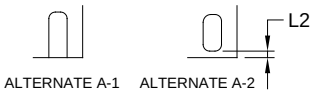

DETAIL A

ALTERNATE TERMINAL CONSTRUCTION

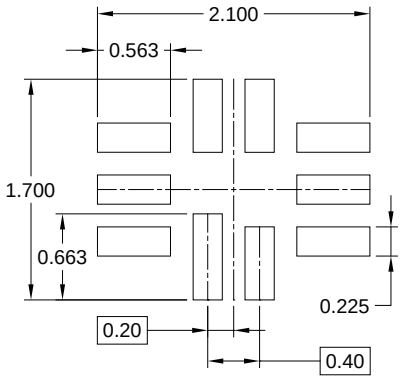

RECOMMENDED LAND PATTERN (Unit: mm)

Symbol	Dimensions In Millimeters		
	MIN	MOD	MAX
A	0.450	-	0.600
A1	0.000	-	0.050
A2	0.152 REF		
b	0.150	0.200	0.250
D	1.750	1.800	1.850
E	1.350	1.400	1.450
e	0.400 TYP		
e1	0.800 REF		
L	0.350	0.400	0.450
L1	0.450	0.500	0.550
L2	0.000	-	0.100
eee	-	0.080	-

NOTE: This drawing is subject to change without notice.

PACKAGE OUTLINE DIMENSIONS

MSOP-10

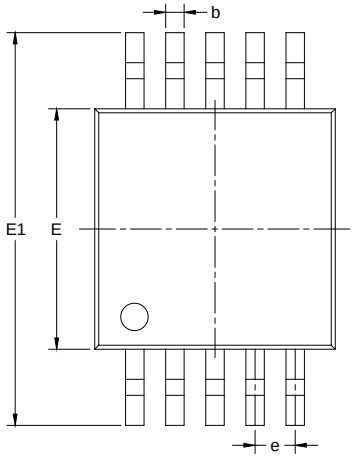

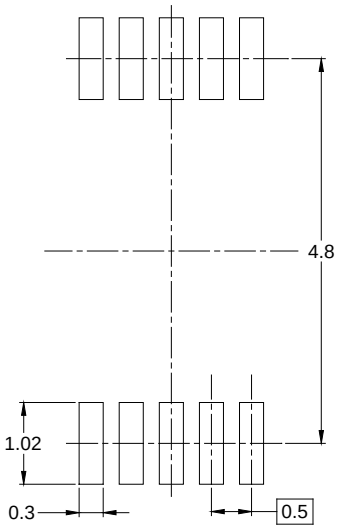

RECOMMENDED LAND PATTERN (Unit: mm)

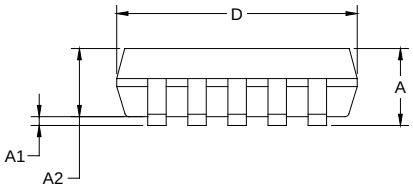

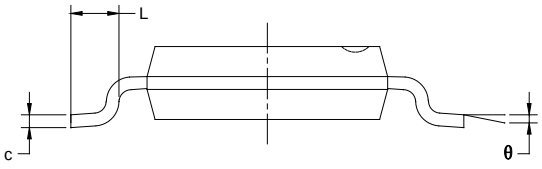

Symbol	Dimensions In Millimeters		Dimensions In Inches	
	MIN	MAX	MIN	MAX
A	0.820	1.100	0.032	0.043
A1	0.020	0.150	0.001	0.006
A2	0.750	0.950	0.030	0.037
b	0.180	0.280	0.007	0.011
c	0.090	0.230	0.004	0.009
D	2.900	3.100	0.114	0.122
E	2.900	3.100	0.114	0.122
E1	4.750	5.050	0.187	0.199
e	0.500 BSC		0.020 BSC	
L	0.400	0.800	0.016	0.031
θ	0°	6°	0°	6°

NOTES:
1. Body dimensions do not include mode flash or protrusion.
2. This drawing is subject to change without notice.

TAPE AND REEL INFORMATION

REEL DIMENSIONS

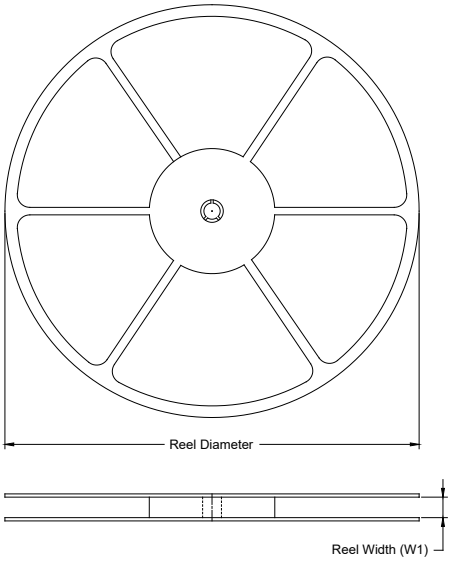

TAPE DIMENSIONS

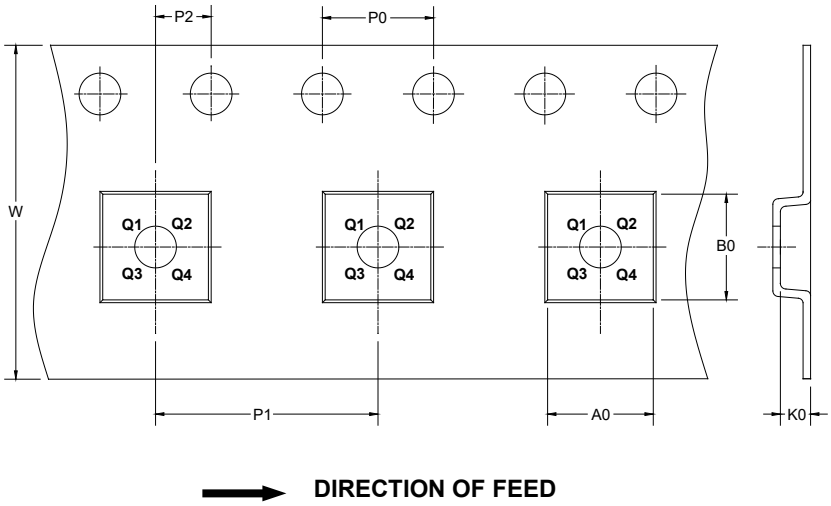

DIRECTION OF FEED

NOTE: The picture is only for reference. Please make the object as the standard.

KEY PARAMETER LIST OF TAPE AND REEL

Package Type	Reel Diameter	Reel Width W1 (mm)	A0 (mm)	B0 (mm)	K0 (mm)	P0 (mm)	P1 (mm)	P2 (mm)	W (mm)	Pin1 Quadrant
UTQFN-1.8×1.4-10L	7″	9.0	1.75	2.10	0.70	4.0	4.0	2.0	8.0	Q1
MSOP-10	13″	12.4	5.20	3.30	1.20	4.0	8.0	2.0	12.0	Q1

DD0001

CARTON BOX DIMENSIONS

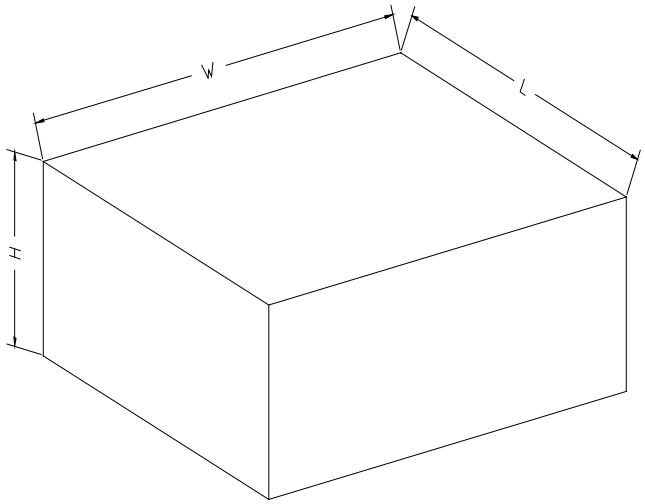

NOTE: The picture is only for reference. Please make the object as the standard.

KEY PARAMETER LIST OF CARTON BOX

Reel Type	Length (mm)	Width (mm)	Height (mm)	Pizza/Carton
7″ (Option)	368	227	224	8
7″	442	410	224	18
13″	386	280	370	5

DD0002