SGM37560
6-CH, 400mA WLED Driver with Independent PWM Dimming for Each String

GENERAL DESCRIPTION

SGM37560 is a 6-channel LED driver for backlight applications with an independent PWM dimming control for each string. Each string can provide adjustable current from 50mA to 400mA. The headroom voltage of each current sink can be programmed in the range of 0.3V to 1V according to different LED currents. The SGM37560 can work in master/slave mode and supports up to 4 devices in parallel to meet the requirements of more LED strings.

The SGM37560 automatically adjusts the Boost controller's output voltage to supply the necessary voltage for each LED string and minimum voltage required at that string's IFBx pin, thereby maximizing driver efficiency. The Boost converter with adjustable frequency can be set with an external resistor, ranging from 100kHz to 800kHz.

This device supports direct PWM brightness dimming, with independent PWM control inputs for each LED string. During PWM dimming, the LED current is switched on or off according to the external PWM signal. The PWM frequency can range between 90Hz and 22kHz.

The SGM37560 also includes multiple protection features such as over-current protection, output short-circuit protection, ISET pin short-to-ground protection, diode open and short detection, LED open and short detection, and over-temperature shutdown. Additionally, it can detect whether the IFB pin of any string is shorted to ground to safeguard the LED string. The device offers programmable thresholds for input under-voltage lockout and output over-voltage protection.

The SGM37560 is available in a Green TSSOP-28 (Exposed Pad) package.

FEATURES

- **6V to 36V Input Voltage Range**
- **Up to 120V Output Voltage**
- **100kHz to 800kHz Boost Switching Frequency**
- **Adaptive Boost Output**
- **Six Current Sinks, Each Capable of 200mA Continuous Current and 400mA Peak Pulse Current**
- **±1.5% Matched Current Sinks between Strings**
- **High Precision PWM Dimming with Resolution Up to 5000:1**
- **Programmable Output Over-Voltage Protection (OVP) Threshold**
- **Programmable Input Under-Voltage Lockout (UVLO) Threshold**
- **Adjustable Soft-Start Time**
- **LED String Open Detection**
- **LED String Short Detection**
- **ISET Pin Short-Circuit Detection**
- **IFB Pin Short-Circuit Detection**
- **Thermal Shutdown**
- **Available in a Green TSSOP-28 (Exposed Pad) Package**

APPLICATIONS

LCD Backlighting
Cluster Display
Secondary Display

PACKAGE/ORDERING INFORMATION

MODEL	PACKAGE DESCRIPTION	SPECIFIED TEMPERATURE RANGE	ORDERING NUMBER	PACKAGE MARKING	PACKING OPTION
SGM37560	TSSOP-28 (Exposed Pad)	-40℃ to +125℃	SGM37560XPTS28G/TR	SGM37560 XPTS28 XXXXX	Tape and Reel, 4000

MARKING INFORMATION

NOTE: XXXXX = Date Code, Trace Code and Vendor Code.

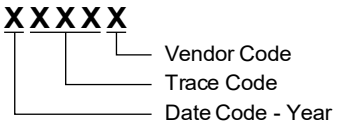

Green (RoHS & HSF): SG Micro Corp defines "Green" to mean Pb-Free (RoHS compatible) and free of halogen substances. If you have additional comments or questions, please contact your SGMICRO representative directly.

ABSOLUTE MAXIMUM RATINGS

VIN Pin ..... -0.3V to 40V
FAULT Pin ..... -0.3V to V_{IN}
IFB1 to IFB6 Pins ..... -0.3V to 40V
FBP, ISET, ISNS, IFBV, OVP, COMP, REF Pins ..... -0.3V to 6V
EN, PWM1 to PWM6 Pins ..... -0.3V to 20V
GDRV, FSW, UVLO, VDD Pins ..... -0.3V to 7V
GDRV Pin (10ns Transient) ..... -2V to 9V
Junction Temperature ..... -40℃ to +150℃
Storage Temperature Range ..... -65℃ to +150℃
Lead Temperature (Soldering, 10s) ..... +260℃
Package Thermal Resistance
TSSOP-28 (Exposed Pad), θ_{JA} ..... 25.5℃/W
TSSOP-28 (Exposed Pad), θ_{JB} ..... 8.2℃/W
TSSOP-28 (Exposed Pad), $\theta_{JC\ (TOP)}$ ..... 18.2℃/W
TSSOP-28 (Exposed Pad), $\theta_{JC\ (BOT)}$ ..... 2.2℃/W
ESD Susceptibility (1) (2)
HBM ..... ±3000V
CDM ..... ±1000V

NOTES:

1. For human body model (HBM), all pins comply with ANSI/ESDA/JEDEC JS-001 specifications.

2. For charged device model (CDM), all pins comply with ANSI/ESDA/JEDEC JS-002 specifications.

RECOMMENDED OPERATING CONDITIONS

V_{IN} ..... 6V to 36V
V_{OUT} ..... V_{IN} to 120V
L ..... 10μH to 100μH
C_{IN} ..... 10μF (MIN)
C_{OUT} ..... 22μF to 220μF
Boost Regulator Switching Frequency, f_{SW} ..... 100kHz to 800kHz
PWM Dimming Frequency, f_{DIM} ..... 90Hz to 22kHz
Operating Ambient Temperature Range ..... -40℃ to +125℃
Operating Junction Temperature Range ..... -40℃ to +125℃

OVERSTRESS CAUTION

Stresses beyond those listed in Absolute Maximum Ratings may cause permanent damage to the device. Exposure to absolute maximum rating conditions for extended periods may affect reliability. Functional operation of the device at any conditions beyond those indicated in the Recommended Operating Conditions section is not implied.

ESD SENSITIVITY CAUTION

This integrated circuit can be damaged if ESD protections are not considered carefully. SGMICRO recommends that all integrated circuits be handled with appropriate precautions. Failure to observe proper handling and installation procedures can cause damage. ESD damage can range from subtle performance degradation to complete device failure. Precision integrated circuits may be more susceptible to damage because even small parametric changes could cause the device not to meet the published specifications.

DISCLAIMER

SG Micro Corp reserves the right to make any change in circuit design, or specifications without prior notice.

PIN CONFIGURATION

(TOP VIEW)

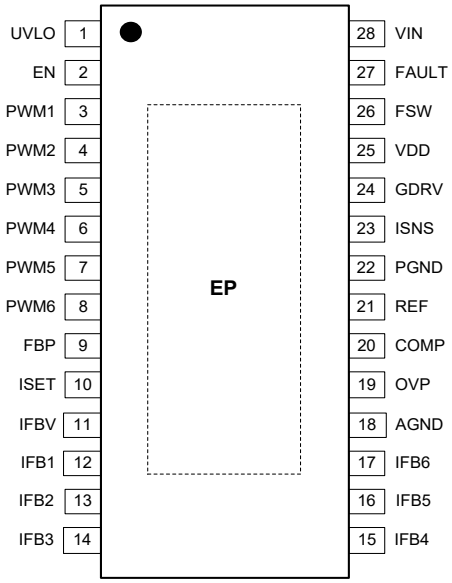

TSSOP-28 (Exposed Pad)

PIN DESCRIPTION

PIN	NAME	TYPE	FUNCTION
1	UVLO	I	Low Voltage Input Lockout Pin. The UVLO threshold is set by connecting a resistor divider from the VIN pin to this pin. If the UVLO function is not used, pull the UVLO pin up to the VDD.
2	EN	I	Enable Control Input. Pulling this pin high will enable the device. An internal resistor pulls the EN pin to GND while the device is enabled.
3, 4, 5, 6, 7, 8	PWM1, PWM2, PWM3, PWM4, PWM5, PWM6	I	PWM Control Input Pins. The PWM frequency ranges from 90Hz up to 22kHz.
9	FBP	O	LED Short Threshold Program Pin. Connect a resistor to ground to set the threshold level.
10	ISET	O	LED Current Set Pin. The maximum LED current is configured by connecting a resistor to GND.
11	IFBV	O	Minimum IFB Voltage Set Pin. The minimum voltage of the IFBx pins is configured by connecting a resistor to GND.
12, 13, 14, 15, 16, 17	IFB1, IFB2, IFB3, IFB4, IFB5, IFB6	I	Current Sink Regulation Input. If one LED string is not used, connect the unused IFBx pin to ground through a resistor between 16kΩ and 32kΩ.
18	AGND	G	Analog Ground.
19	OVP	I	Over-Voltage Detection Pin. The maximum output voltage of the Boost converter is configured by a resistor divider connected between the output voltage and GND.
20	COMP	O	Boost Loop Compensation Pin. Boost loop stability can be configured by the external RC network.
21	REF	O	Internal Reference Voltage Pin. A capacitor connected to this pin controls the soft-start duration. When using multiple devices in parallel, connect the master's REF pin to the slave's COMP pin.
22	PGND	G	Power Ground. PGND and AGND are not connected internally.

PIN DESCRIPTION (continued)

PIN	NAME	TYPE	FUNCTION
23	ISNS	I	Current Sense Pin. This pin monitors the voltage across the external current sense resistor in the inductor during normal operation, enabling peak current mode control and limiting the inductor current every switching cycle.
24	GDRV	O	Power Switch Gate Driver Pin. This pin drives the gate of the external N-channel MOSFET power transistor.
25	VDD	O	Internal Regulator Voltage Pin. This pin provides 6V voltage from the internal regulator and requires a 1μF capacitor for stability.
26	FSW	O	Switching Frequency Setting Pin. Connect a resistor between the FSW pin and ground to select the switching frequency of the Boost converter from 100kHz to 800kHz. If the external input voltage is higher than 3.5V or lower than 0.5V, the internal clock is disabled and the device functions as a slave.
27	FAULT	O	Fault Indicator Pin. Open-drain output that goes to high-impedance state during fault conditions.
28	VIN	I	Input Supply Pin.
Exposed Pad	EP	—	Exposed pad should be soldered to the ground plane.

NOTE: I = input, O = output, G = ground.

SIMPLIFIED SCHEMATIC

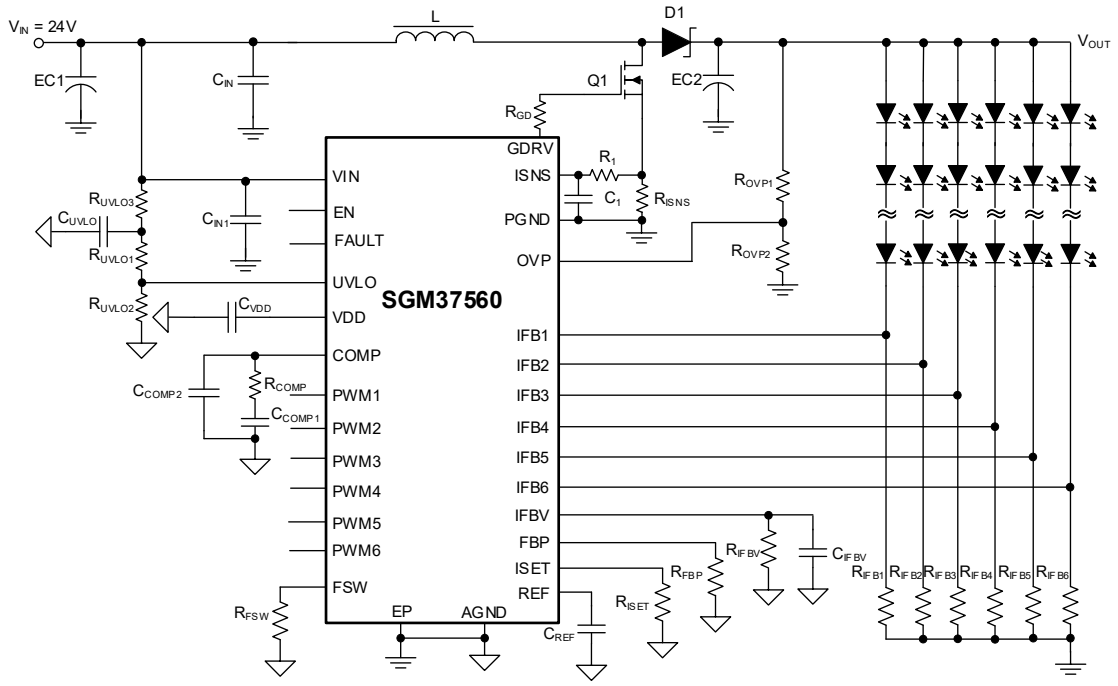

Figure 1. Simplified Schematic

ELECTRICAL CHARACTERISTICS

(V_{IN} = 24V, C_{IN} = 1μF, C_{IN1} = 2.2μF, C_{VDD} = 1μF, EC1 = EC2 = 100μF, T_J = -40℃ to +125℃, all typical values are measured at T_J = +25℃, unless otherwise noted.)

PARAMETER	SYMBOL	CONDITIONS		MIN	TYP	MAX	UNITS
Power Supply							
Operating Input Voltage	V_{IN}			6		36	V
Under-Voltage Lockout Threshold	V_{IN_UVLO}	V_{IN} falling			5.4	5.7	V
VIN UVLO Hysteresis	V_{IN_HYS}				200		mV
Operating Quiescent Current into VIN	I_{Q_VIN}	Device enabled, no switching, V_{IN} = 12V				2.3	mA
Shutdown Current	I_{SD}	V_{IN} = 12V				6	μA
		V_{IN} = 24V				10	
		V_{IN} = 36V				14	
Regulation Voltage for Internal Circuit	V_{DD}	V_{IN} > 6.5V, 0mA < I_{DD} < 15mA		5.7	6	6.3	V
EN and PWMx							
Logic High Input on EN, PWMx	V_{IH}			1.8			V
Logic Low Input on EN, PWMx	V_{IL}					0.8	V
Pull-Down Resistance on EN, PWMx	R_{PD}			0.6	1.4	2.2	MΩ
UVLO							
Threshold Voltage at UVLO Pin	V_{UVLOTH}			1.2	1.23	1.26	V
UVLO Input Bias Current	I_{UVLO}	V_{UVLO} = V_{UVLOTH} - 50mV	T_J = -40℃ to +85℃	-0.05		0.05	μA
			T_J = -40℃ to +125℃	-0.3		0.3	
		V_{UVLO} = V_{UVLOTH} + 50mV		-4.3	-3.9	-3.3	
Soft-Start							
Soft-Start Charging Current	I_{SS}	PWM on, V_{REF} < 2V			180		μA
		PWM on, V_{REF} > 2V			10		
Current Regulation							
ISET Pin Voltage	V_{ISET}			1.212	1.229	1.246	V
ISET Short-to-Ground Protection Threshold	I_{ISET_P}			115	145	175	μA
Current Multiple I_{IFB}/I_{ISET}	K_{ISET}	I_{ISET} = 32.56μA, V_{IFB} = 0.5V	T_J = -40℃ to +85℃	3932	3992	4052	
			T_J = -40℃ to +125℃	3924	3992	4060	
Current Accuracy	I_{IFB_AVG}	I_{ISET} = 32.56μA, V_{IFB} = 0.5V		127.6	130	132.4	mA
Current Matching $(I_{FB_MAX} - I_{FB_MIN})/2I_{FB_AVG}$	K_{IFB_M}	I_{ISET} = 32.56μA, V_{IFB} = 0.5V			0.2	1.5	%
IFB Pin Leakage Current at Dimming Off	I_{IFB_LEAK}	V_{IFB} = 40V	T_J = -40℃ to +85℃			1	μA
			T_J = -40℃ to +125℃			10	
Current Sink Maximum Output Current (1)	I_{IFB_MAX}	I_{ISET} = 32.56μA, V_{IFB} = 0.35V		127.6	130	132.4	mA
IFB Regulation Voltage							
Regulation Voltage at IFBx	V_{IFBx}	Measured on V_{IFB_MIN}, other V_{IFB} are 0.5V above V_{IFB_MIN}, I_{IFBx} = 130mA, V_{IFBV} = 0.5V			508		mV
IFB Regulation Voltage Setting Sourcing Current at IFBV	I_{IFBV}	V_{IFBV} = 0.5V		0.239	0.25	0.261	I_{SET}
IFBV Voltage Setting Range	V_{IFBV}			0.3		1	V
Boost Reference Voltage							
Reference Voltage Range for Boost Controller	V_{REF}			0		3.3	V
Leakage Current at REF Pin	I_{REF_LEAK}	T_J = -40℃ to +85℃		-25		25	nA
		T_J = -40℃ to +125℃		-300		300	

NOTE: 1. When the V_{IFB} drops to 0.35V, it can sink 130mA output current normally.

ELECTRICAL CHARACTERISTICS (continued)

(V_{IN} = 24V, C_{IN} = 1μF, C_{IN1} = 2.2μF, C_{VDD} = 1μF, EC1 = EC2 = 100μF, T_J = -40℃ to +125℃, all typical values are measured at T_J = +25℃, unless otherwise noted.)

PARAMETER	SYMBOL	CONDITIONS	MIN	TYP	MAX	UNITS
Oscillator						
Switching Frequency	f_{SW}	R_{FSW} = 200kΩ	180	200	220	kHz
FSW Pin Reference Voltage	V_{FSW}			1.8		V
Maximum Duty Cycle	D_{MAX}	f_{SW} = 200kHz	92	95		%
Minimum Pulse Width	t_{ON_MIN}			180		ns
Logic High Input Voltage	V_{FSW_H}		3.5			V
Logic Low Input Voltage	V_{FSW_L}				0.5	V
Error Amplifier						
Comp Pin Sink Current	I_{SINK}	V_{OVP} = V_{REF} + 200mV, V_{COMP} = 1V		20		μA
Comp Pin Source Current	I_{SOURCE}	V_{OVP} = V_{REF} – 200mV, V_{COMP} = 1V		20		μA
Error Amplifier Transconductance	Gm_{EA}		65	110	155	μS
Gate Driver						
Gate Driver Impedance when Sourcing	R_{GDRV_SRC}	V_{DD} = 6V, I_{GDRV} = -20mA		1.5	2.5	Ω
Gate Driver Impedance when Sinking	R_{GDRV_SNK}	V_{DD} = 6V, I_{GDRV} = 20mA		0.75	1.5	Ω
Over-Current Detection Threshold	V_{ISNS_OC}	V_{IN} = 6V to 36V	376	400	424	mV
Over-Voltage Protection (OVP)						
Output Voltage OVP Threshold	V_{OVPTH}		2.97	3.05	3.12	V
Leakage Current	I_{OVP}	T_J = -40℃ to +85℃	-50		50	nA
		T_J = -40℃ to +125℃	-300		300	
IFBx Over-Voltage Threshold	V_{OVP_IFB}	PWM on		38		V
LED Short Detection						
LED Short Detection Sourcing Current	I_{FBP}	V_{FBP} = 1V	0.239	0.25	0.261	I_{ISET}
Fault Indicator						
Leakage Current in High Impedance	I_{FAULT_H}	V_{FAULT} = 24V		1		nA
Sink Current at Low Output	I_{FAULT_L}	V_{FAULT} = 1V	1	2		mA
Thermal Shutdown						
Thermal Shutdown Threshold	T_{SD}			150		℃
Thermal Shutdown Threshold Hysteresis	T_{SD_HYS}			15		℃

TYPICAL PERFORMANCE CHARACTERISTICS

T_A = +25℃, V_{IN} = 24V, V_{OUT} = 80V, 130mA × 6 channels, unless otherwise noted.

Total LED Average Current vs. PWM Dimming Duty Cycle

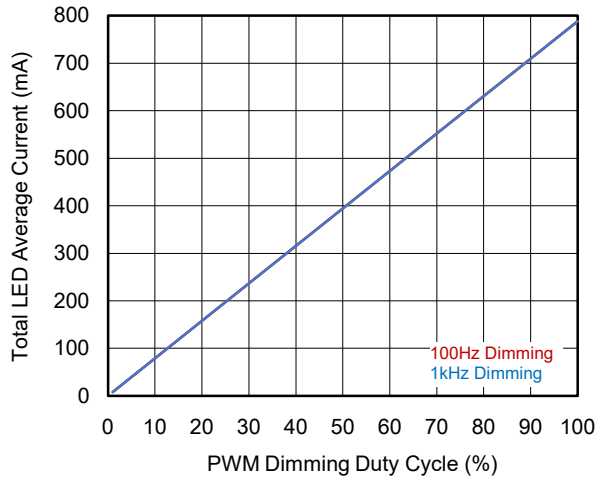

Total LED Average Current vs. PWM Dimming Duty Cycle (Low)

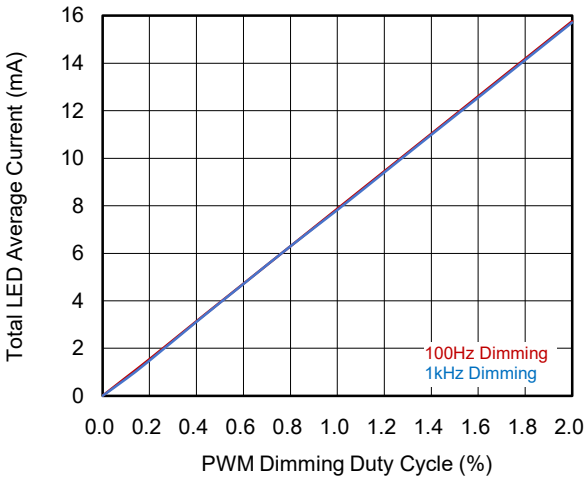

Efficiency vs. Output Current

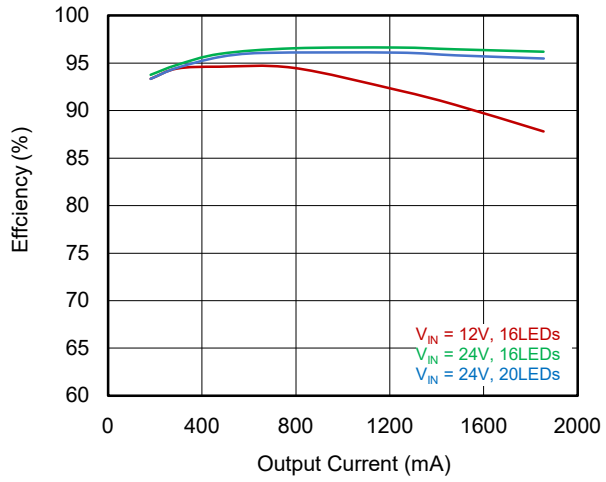

Frequency vs. Resistance

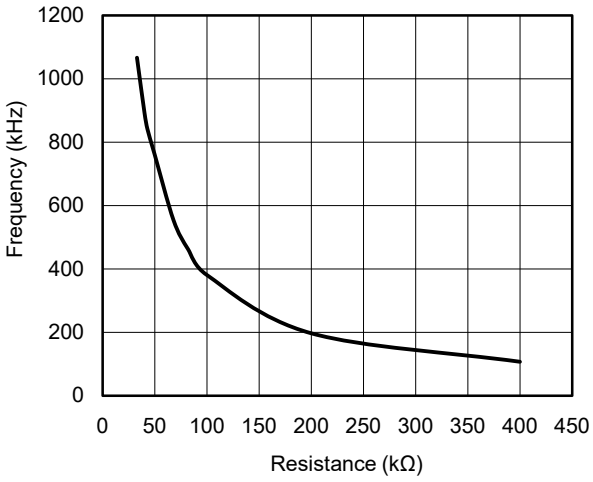

Minimum Headroom Voltage vs. LED Current

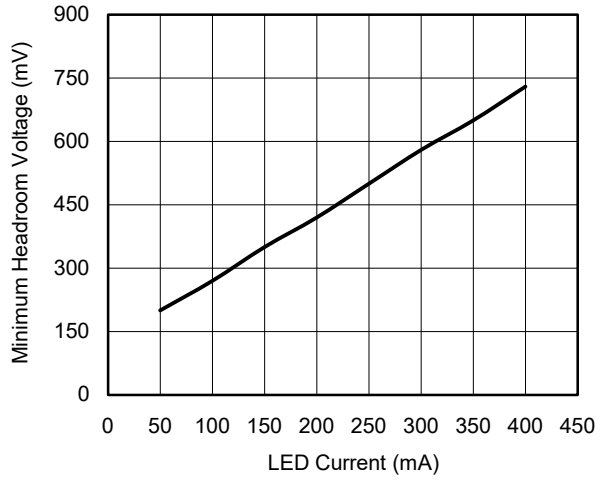

Boost Switching Waveform

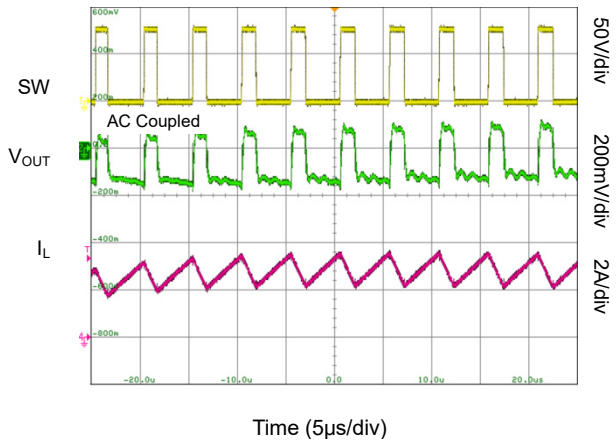

TYPICAL PERFORMANCE CHARACTERISTICS (continued)

T_A = +25℃, V_{IN} = 24V, V_{OUT} = 80V, 130mA × 6 channels, unless otherwise noted.

Start-up Waveform

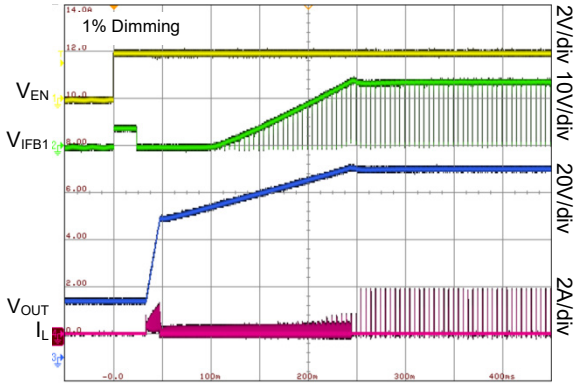

Time (50ms/div)

Start-up Waveform

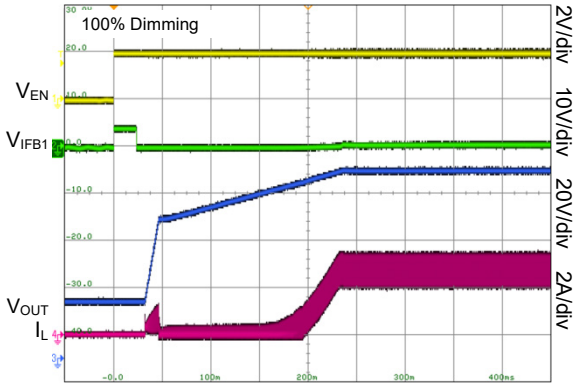

Time (50ms/div)

Dimming Waveform

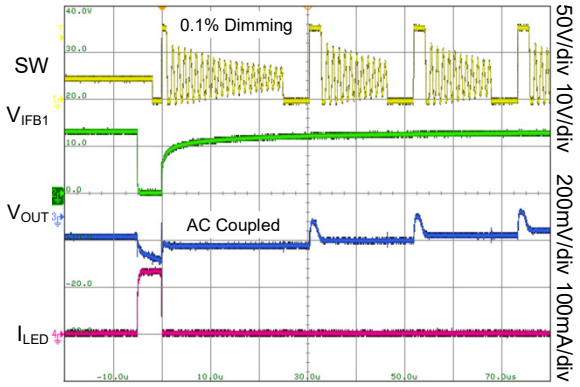

Time (10μs/div)

Dimming Waveform

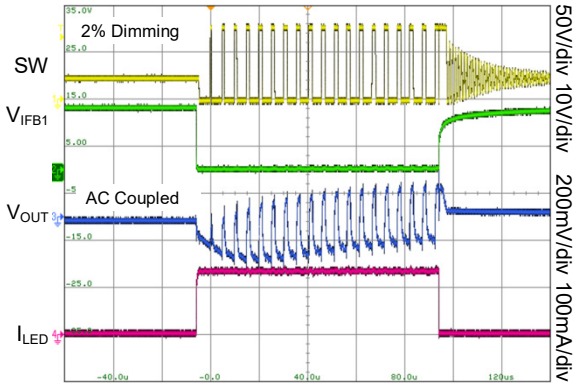

Time (20μs/div)

Shutdown Waveform

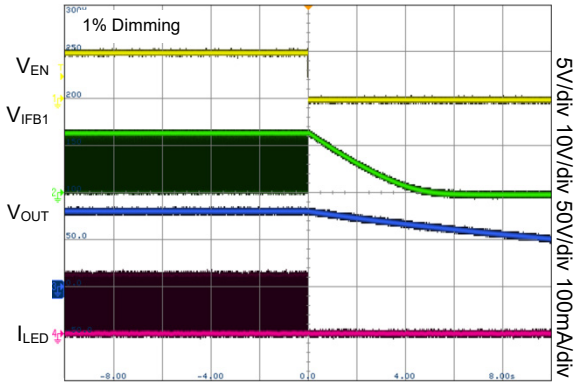

Time (2s/div)

Shutdown Waveform

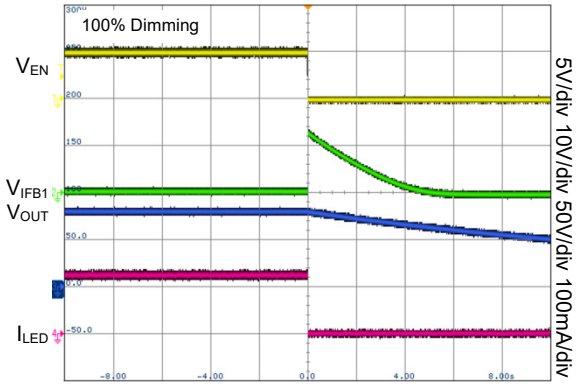

Time (2s/div)

TYPICAL PERFORMANCE CHARACTERISTICS (continued)

T_A = +25℃, V_{IN} = 24V, V_{OUT} = 80V, 130mA × 6 channels, unless otherwise noted.

LED Open Protection

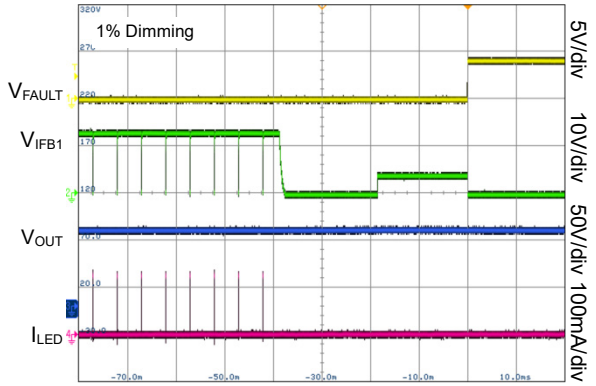

Time (10ms/div)

LED Open Protection

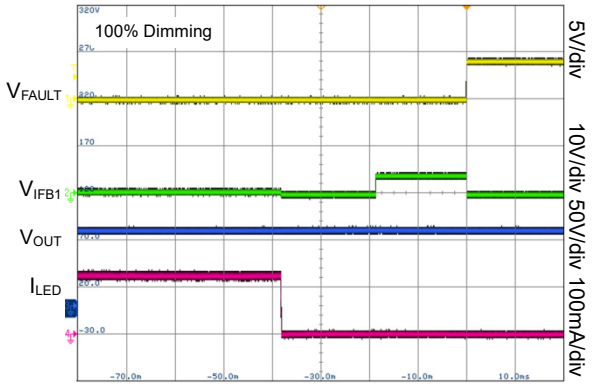

Time (10ms/div)

LED Short Protection

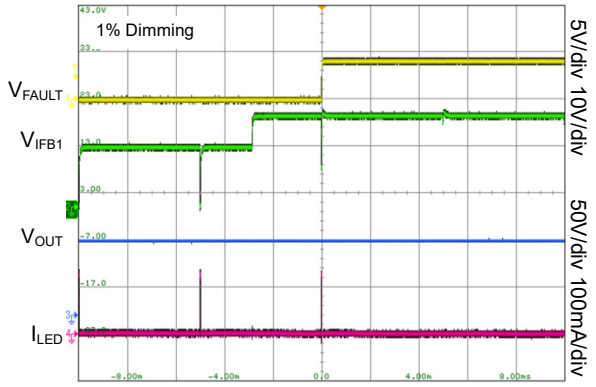

Time (2ms/div)

LED Short Protection

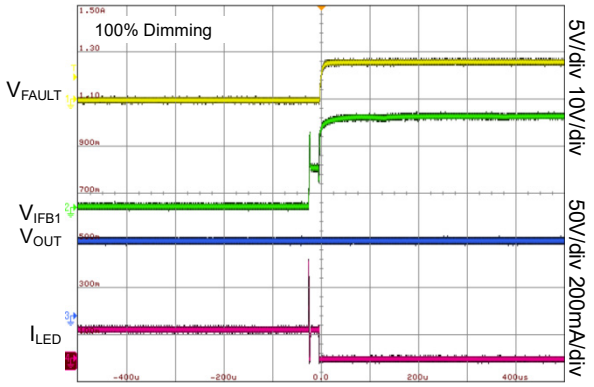

Time (100μs/div)

IFB Short-to-Ground Protection

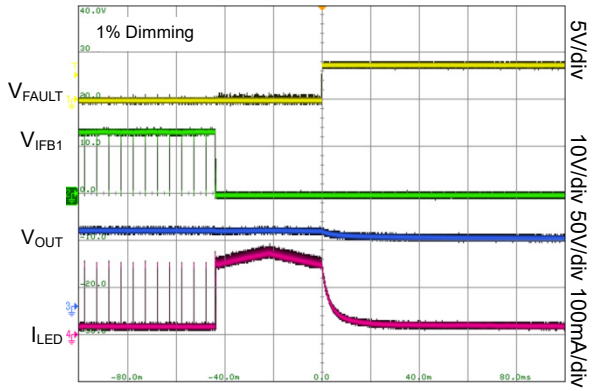

Time (20ms/div)

IFB Short-to-Ground Protection

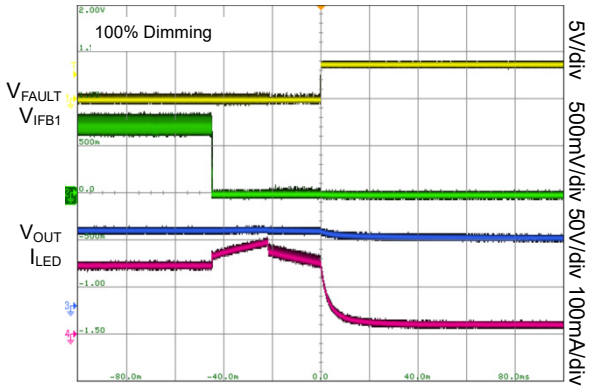

Time (20ms/div)

FUNCTIONAL BLOCK DIAGRAM

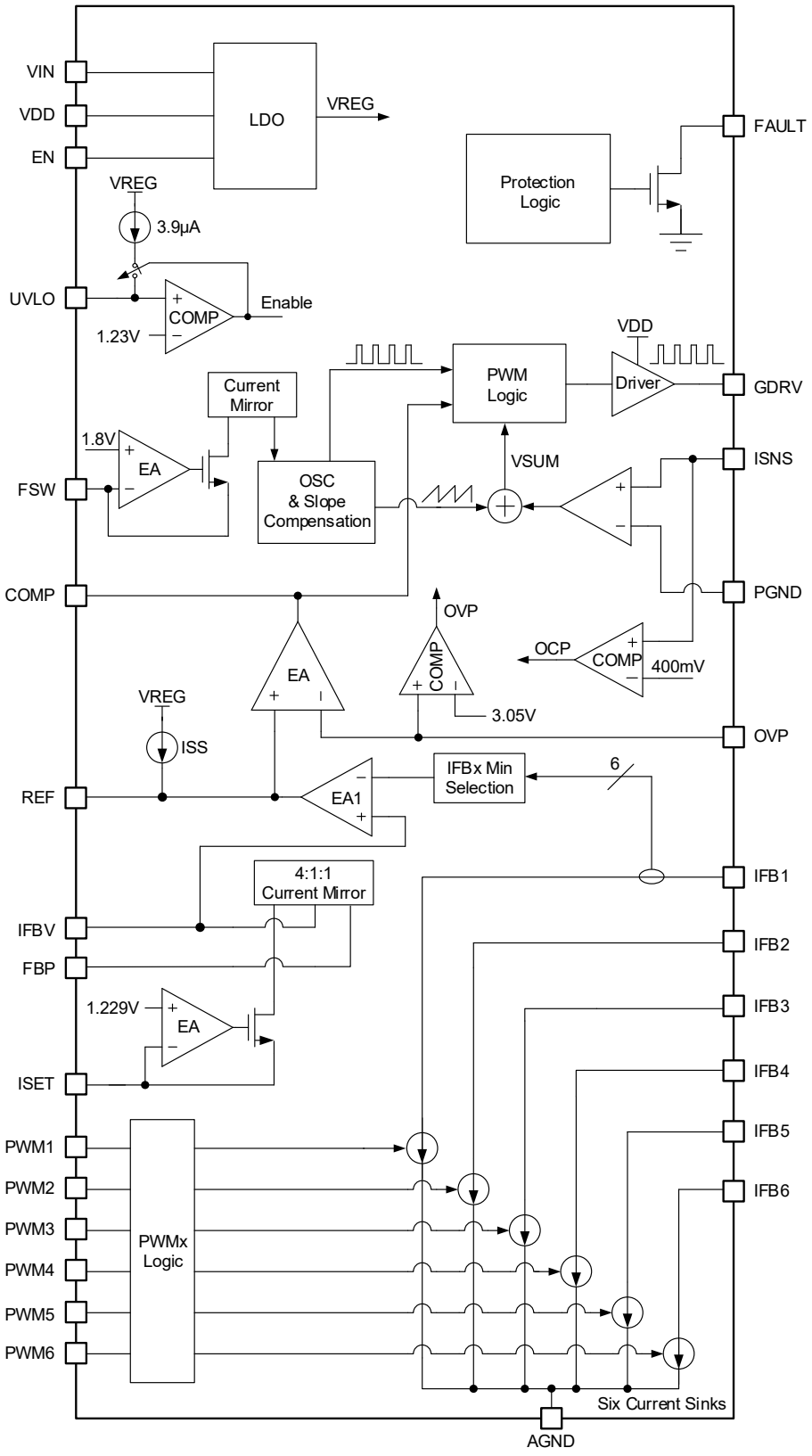

Figure 2. Block Diagram

DETAILED DESCRIPTION

Overview

The SGM37560 is a highly integrated LCD backlight driver that offers individual PWM dimming for each string. This current-mode Boost controller can support as many as six white LED strings, each made up of multiple series-connected LEDs. Each string has its own current regulator. The LED current is programmable from 50mA to 400mA, with ±1.5% matching accuracy between strings. The minimum current-sink voltage can be set from 0.3V to 1V to accommodate different LED current levels. The device operates from an input voltage of 6V to 36V.

Supply Voltage

The SGM37560 contains an internal linear regulator that supplies its analog and logic circuits. The VDD pin, which is the regulator output, requires a 1μF bypass capacitor. Its voltage is ready once EN is pulled high.

Enable and Under-Voltage Lockout

The SGM37560 is enabled with soft-start when EN exceeds 1.8V. EN below 0.8V disables the device.

The device includes under-voltage lockout protection. When V_{IN} falls below 5.4V (TYP), the device turns off. It resumes operation after V_{IN} recovers above the V_{IN_UVLO} threshold plus the hysteresis voltage (V_{IN_HYS}). If a higher UVLO threshold is needed, use the UVLO pin with an external resistor divider, as shown in Figure 3. When the UVLO pin exceeds 1.23V (TYP), the device powers on and a 3.9μA hysteresis current source is added. When the UVLO pin falls below 1.23V (TYP), the current source is removed. Resistors R_{UVLO1}, R_{UVLO2}, and R_{UVLO3} can be calculated from the desired V_{START} and V_{STOP} using Equation 1. To reduce noise coupling, place the R_{UVLO1}/ R_{UVLO2} divider close to the UVLO pin. A filter capacitor of at least 10nF can reduce switching-ripple effects and improve noise immunity.

If UVLO is not used, pull the UVLO pin up to VDD.

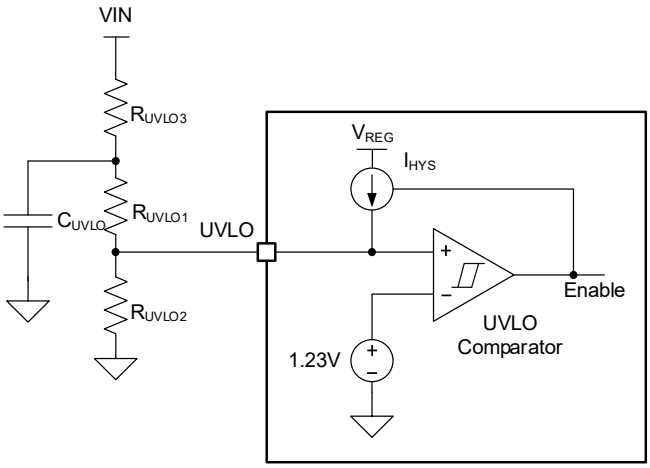

Figure 3. Under-Voltage Lockout Circuit

$$R_{UVLO1} + R_{UVLO3} = \frac{V_{START}-V_{STOP}}{I_{HYS}}$$

$$R_{UVLO2} = \left(R_{UVLO1} + R_{UVLO3}\right) \times \frac{1.23V}{V_{START} - 1.23V} \quad (1)$$

where I_{HYS} is 3.9μA sourced current from the UVLO pin.

During an under-voltage lockout (UVLO) event, the FAULT pin is placed in a high-impedance state. Once the UVLO condition is cleared, the FAULT pin returns to low impedance.

DETAILED DESCRIPTION (continued)

Power-up Sequencing and Soft-Start

The input voltage, UVLO pin voltage, EN input, and input dimming PWM signal control the power-up. After V_{IN} exceeds the minimum required input voltage of 5.9V, the internal circuits are ready to power up. After UVLO exceeds 1.23V (TYP) and EN is high, the internal LDO and logic circuits activate. The device outputs a 20ms pulse to detect unused channels and remove them from the control loop. Soft-start begins when any PWM dimming signal is high. If PWM signals are present before EN goes high, soft-start begins immediately after unused-channel detection.

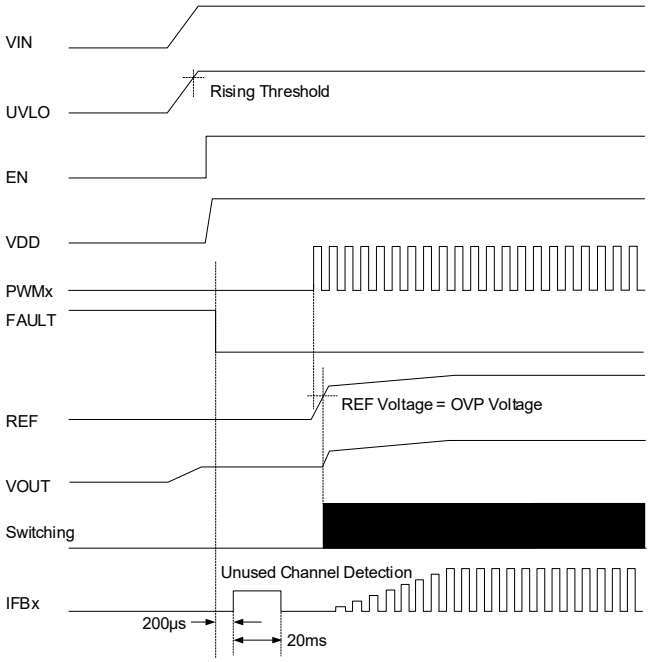

Figure 4. Power-up Sequencing

The SGM37560 integrates an on-chip soft-start function that works in conjunction with an external capacitor placed on the REF pin to suppress inrush current at power-up. During the start-up phase, this REF capacitor is charged by an internal soft-start current source. Once the REF voltage climbs above the output feedback level presented at OVP, the Boost controller commences switching, the output voltage begins its ramp-up, and the LED current sinks simultaneously and starts energizing the LED strings. The charging current follows a two-step profile. At the very beginning of soft-start, the REF capacitor is charged at 180μA (TYP). After the REF voltage has risen above 2V, the current source switches down to a 10μA (TYP) level and continues charging the capacitor. While the current sinks are driving the LED strings, the device continuously monitors the voltages on the IFB pins. Soft-start ends at the moment the lowest IFB voltage comes within 100mV of the IFBV setting — at that point charging stops. The SGM37560 then enters normal operation, where it regulates the minimum IFB voltage to the value programmed by the resistor connected to IFBV pin. The total soft-start duration is determined by the external capacitance. To accommodate different start-up timing requirements and output voltage levels, the recommended REF capacitance range is from 1μF to 4.7μF.

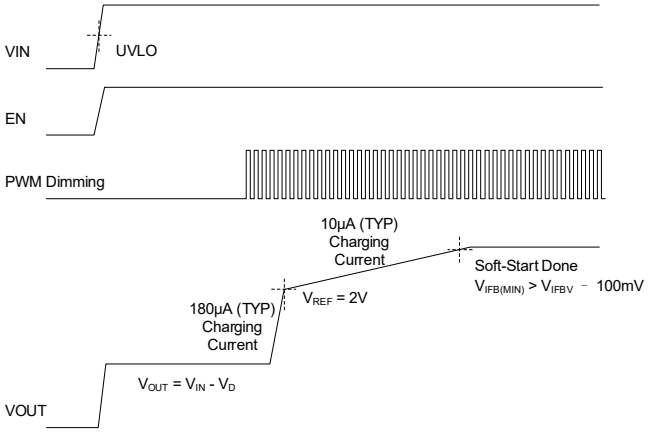

Figure 5. Soft-Start Waveforms

Boost Controller

The SGM37560 regulates its output voltage by means of current-mode PWM control. Each switching cycle starts when the controller turns on the external MOSFET. The input voltage is then impressed across the inductor, causing its current to rise and store energy, while the output capacitor delivers current to the load. When the inductor current reaches the level established by the error amplifier output, the MOSFET is switched off and the external Schottky diode becomes forward-biased. The energy stored in the inductor is then released to recharge the output capacitor and feed the load. This action is repeated every switching cycle. The switching frequency is programmed by an external resistor.

DETAILED DESCRIPTION (continued)

Switching Frequency

An external resistor (R_{FSW} in Figure 6) sets the switching frequency within a 100kHz to 800kHz range. For a given frequency, the required resistance can be calculated using Equation 2. Table 1 lists the recommended resistance values for several switching frequencies.

$$f_{SW} = \frac{40000}{R_{FSW}}(kHz) \quad (2)$$

Table 1. Recommended Resistance Values for Switching Frequencies

R_{FSW}	f_{SW}
400kΩ	100kHz
200kΩ	200kHz
100kΩ	375kHz
82kΩ	450kHz
50kΩ	720kHz

Current Regulation

Each of the six current-sink channels can be set to sink as much as 400mA per LED string. The desired LED current is programmed by the resistor R_{ISET} connected to the ISET pin, as defined in Equation 3.

$$I_{LED} = \frac{V_{ISET}}{R_{ISET}} \times K_{ISET} \quad (3)$$

Where V_{ISET} is the ISET pin voltage of 1.229V (TYP), K_{ISET} is the current multiple of 3992 (TYP).

For proper operation, the current-sink regulator must have a minimum headroom voltage at the IFBx pins so that it can sink the programmed LED current. For instance, if the LED current is set to 130mA (TYP), the IFB pin voltage must be greater than 0.35V. For other LED current settings, the recommended minimum headroom voltage can be found in Minimum Headroom Voltage vs. LED Current. The SGM37560 regulates the lowest IFB pin voltage to match the IFBV voltage. This IFBV voltage can be adjusted by an external resistor (R_{IFBV}) connected to the IFBV pin. Once the minimum IFB voltage has been selected, IFBV must be set to the same value, and the required resistor value can be calculated by Equation 4.

$$V_{IFBV} = \frac{R_{IFBV}}{R_{ISET}} \times 307.3mV \quad (4)$$

When the LED current is set to a high value, a higher headroom voltage is required, which causes the device to generate more heat. To keep total power dissipation within the package limit, all strings cannot sink large currents typically in continuous mode; instead, pulse mode should be used.

PWM Dimming

PWM dimming of LED brightness is accomplished by feeding an external PWM waveform with a frequency ranging from 90Hz to 22kHz into the PWMx pins, with a separate PWM input available for every LED string. As the PWM duty is varied from 0% to 100%, the LED output ramps correspondingly between its dimmest and brightest states.

If all PWM voltages remain low for longer than 20ms, the Boost stops working, and the REF voltage drops to 0V. Once at least one PWM signal returns high, the Boost soft-starts again and brightness is restored.

Unused LED String

When an application calls for fewer than six LED strings, the SGM37560 merely needs the unused IFB pin connected to GND via a resistor in the 16kΩ to 32kΩ range. After power-up, a 60μA current source measures the IFB pin voltage. If IFB pin voltage is within the range of the voltage window set internally, the corresponding LED string will not be light up.

DETAILED DESCRIPTION (continued)

Protections

The SGM37560 includes a comprehensive protection suite that keeps the system safe under any abnormal condition. Certain protections latch the device off until the supply is recycled or the device is disabled and then enabled again. While latched off, the REF pin voltage is discharged to 0V.

Switch Current Limit Protection

To implement current limit protection, the SGM37560 senses the inductor current by monitoring the voltage developed across the sense resistor (R_{ISNS}). While the MOSFET is conducting, if the ISNS pin voltage exceeds 400mV typically (V_{ISNS_OC}), the device immediately switches the MOSFET off and keeps it off until the following switching cycle. Accordingly, the switch current limit threshold is given by 400mV divided by R_{ISNS}.

Schottky Diode Open Protection

At start-up, the SGM37560 verifies the connection of the external power topology and samples the OVP pin. If the voltage stays below 70mV, which reveals the diode open, the IC is latched off until the input is cycled, or after the device is enabled once more.

Schottky Diode Short Protection

If the rectifier schottky diode is shorted, the output voltage drops to VIN and all IFB voltages go low. This triggers an all-string-open condition, latching off the SGM37560. During this sequence, if the OVP pin voltage drops below 500mV, the SGM37560 enters latch-off state immediately without checking the all-string-open condition, enabling faster protection for the device.

Over-Voltage Protection before Soft-Start Ends

Before soft-start ends, if the voltage on any IFB pin reaches the 38V (TYP) V_{OVP_IFB} threshold, the device immediately stops switching and enters latch-off to prevent damage. In this latched-off condition, the REF pin is discharged.

Output Over-Voltage Protection

A resistor divider is used to set the maximum output voltage of the Boost converter. To ensure that the LED string can be turned on at the programmed current, this maximum voltage must be higher than the forward-voltage drop of the LED string. The required maximum voltage is obtained by multiplying the maximum LED forward voltage by the number of series LEDs (n), then adding 1V to allow for regulation, resistor tolerances, and load transients.

The recommended bottom feedback resistor of the divider (R_{OVP2}) is 10kΩ. The top resistor (R_{OVP1}) is calculated with Equation 5, where V_{OVP} is the maximum output voltage of the Boost converter.

$$R_{OVP1} = \left(\frac{V_{OVP}}{3.05} - 1\right) \times R_{OVP2} \quad (5)$$

If the OVP pin voltage rises above the 3.05V (TYP) over-voltage protection threshold, which indicates that the output voltage has exceeded the clamp threshold, the SGM37560 limits the output voltage to the programmed threshold. If the OVP pin voltage does not fall below the OVP threshold within 500ms, the device enters latch-off and stays disabled until the input power or the EN pin voltage is cycled.

Output Short-to-Ground Protection

During normal operation, if V_{OUT} is shorted to GND, the Boost output capacitor is rapidly discharged, and the divided OVP voltage drops accordingly. When the OVP voltage falls below 500mV, the device is latched off until VIN or EN pin voltage is recycled. For normal operation, it is recommended to set the OVP steady-state voltage above 2V.

DETAILED DESCRIPTION (continued)

LED Open Protection

When an LED string is open, the SGM37560 checks the IFB voltage. If the IFB voltage remains below 0.2V for 20ms, the corresponding current sink is turned off and an internal pull-up current source (60μA) is enabled so that the IFB voltage can be sensed again. When this pull-up current raises the IFB voltage to a high level, the string is identified as open. The device then disables that IFB pin and removes it from the output-voltage feedback path. As a result, the output voltage settles back to the level needed by the LED strings that are still connected, and the current regulation on their IFB pins is maintained throughout this sequence. If all LED strings are open, the SGM37560 is latched off.

LED Short-Cross Protection

If one or more LEDs in a string become shorted, the voltage on the corresponding IFB pin rises while the pin still sinks the LED current, increasing power dissipation in the device. To protect against this, the SGM37560 offers a programmable LED short-cross protection feature, which is configured by selecting the appropriate FBP pin resistor (R_{FBP}) through Equation 6.

$$V_{LED_SHORT} = \frac{R_{FBP}}{R_{ISET}} \times 1.229V \quad (6)$$

Whenever any IFB pin voltage exceeds V_{LED_SHORT}, the device disables that pin's current sink and removes the pin from the output-voltage regulation loop, while regulation of the remaining IFB pins continues unaffected.

IFB Short-to-Ground Protection

A short from IFB to ground would otherwise make LED current uncontrollable. If the Boost converter tried to raise its output voltage to lift the IFB voltage, the fault would worsen and the LED string could be damaged by over-current. The SGM37560 therefore provides protection for this failure mode.

If IFB is shorted to ground before the device is enabled, the SGM37560 sources 60μA during start-up and monitors the IFB voltage. If IFB stays below 0.4V, start-up is aborted and a fault is indicated, protecting the LED string.

If an IFB pin is shorted to ground during normal operation, the voltage on its associated IFB pin falls to 0V. The SGM37560 checks the IFB voltage. If the IFB voltage remains below 0.2V for 20ms, the corresponding current sink is turned off and an internal pull-up current source (60μA) is enabled, so that the IFB voltage can be sensed again. If the IFB voltage is still low, this means the IFB pin is shorted to 0V. The Boost converter is turned off and the REF voltage is discharged to ground to protect the LED string.

ISET Short-to-Ground Protection

Once enabled, the SGM37560 supervises the current sourcing from ISET pin. If the current exceeds 145μA (TYP), the device is turned off, since this indicates a possible ISET-to-ground short or an undersized current-setting resistor. The device resumes normal operation when the ISET sourcing current returns to its nominal level.

FSW Short-to-Ground Protection

Once enabled, the SGM37560 detects the output current at the FSW pin. If the current sourced from FSW exceeds 72μA, this indicates a possible FSW-to-ground short or an undersized current-setting resistor. The device is latched off and stays disabled until the input power or the EN pin voltage is cycled.

Thermal Shutdown

If the junction temperature exceeds +150℃ (TYP), thermal shutdown is activated and the device is turned off immediately. Operation resumes automatically once the junction temperature drops below +135℃ (TYP), giving about 15℃ of hysteresis.

DETAILED DESCRIPTION (continued)

Indication for Fault Conditions

The SGM37560 provides an open-drain FAULT pin that serves as a fault indicator for abnormal operating states. Under normal operation, this pin stays at a low level. Once any fault is detected, the pin switches to a high-impedance state, allowing it to be raised to a high level via an external pull-up resistor. The FAULT pin reports the following fault types:

- Over-voltage condition at the OVP pin or the IFB pin
- Input under-voltage
- LED short and open
- IFB short-to-ground
- ISET short-to-ground
- FSW short-to-ground
- Diode open and short
- Output short-circuit
- Over-temperature.

Table 2. Protection List

Protection Item	Result	Fault	Latch Off/Retry
Diode open	Cannot start up	Y	Latch off
Diode short	Output voltage low	Y	Latch off
LED string short during start-up	IFB OVP	Y	Latch off
LED short	LED string off	Y	LED string latch off
IFB short-to-ground	Boost off	Y	Latch off
ISET short-to-ground	All LED strings off	Y	Retry
FSW short-to-ground	Boost off	Y	Latch off
LED string open	LED string off	Y	LED string latch off
All LED strings open during start-up	VOUT OVP	Y	Latch off
Input voltage UVLO	Boost off	Y	Retry
UVLO	Boost off	Y	Retry
Output short to GND	Output voltage low	Y	Latch off
VOUT OVP	VOUT OVP	Y	Latch off
Thermal shutdown	Shutdown	Y	Retry

APPLICATION INFORMATION

Typical Application

When the application calls for additional LED strings, the SGM37560 can work in master/slave mode. A device becomes a slave whenever the voltage at the FSW pin is lower than 0.5V or higher than 3.5V. In this configuration, the master integrates the Boost controller and generates the power rail shared by every LED string, while the slave acts purely as an LED driver, reporting the required headroom voltage back to the master through a link between its COMP pin and the master's REF pin. For proper operation, the slave's ISNS pin should be tied to ground, and its OVP pin must be programmed to sit 3% above the master's OVP level. To consolidate fault reporting, the master's FAULT output can be wired to the slave's FSW pin, so that any fault arising on either chip is indicated through the slave's FAULT.

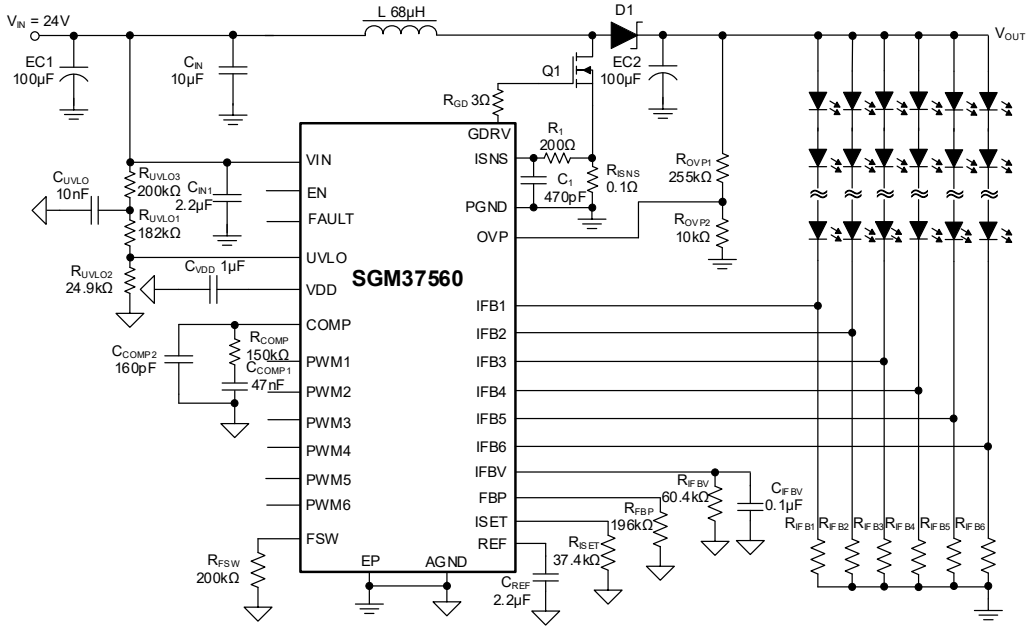

Figure 6. Typical Application Circuit

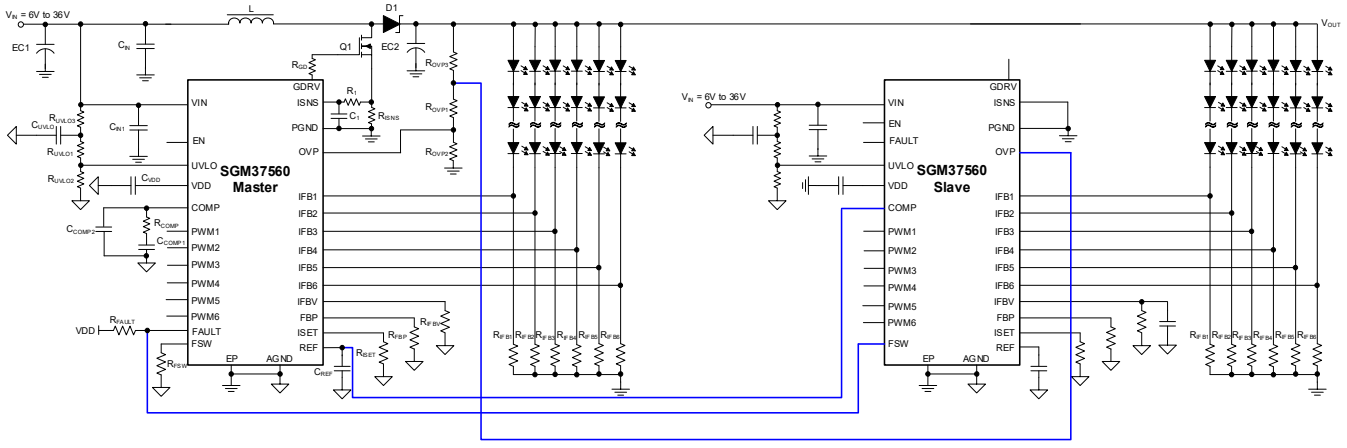

Figure 7. Parallel Operation Schematic

APPLICATION INFORMATION (continued)

Detailed Design Procedure

Schottky Diode

For optimum efficiency, the SGM37560 requires a fast rectifier. The diode's average and peak current ratings should exceed the LED output current and the inductor peak current, respectively. Its reverse breakdown voltage must also be greater than the application's output voltage.

Switch MOSFET and Gate Driver Resistor

The SGM37560 requires a power N-MOSFET (Q1 in Figure 6) as the switch. The MOSFET's voltage and current ratings must be higher than the application output voltage and the inductor peak current. Adding a resistor (R_{GD} in Figure 6) between the GDRV pin and the gate of the switching MOSFET is advantageous. This resistor limits the gate-drive current and improves EMI performance. A 3Ω resistor is recommended. If the resistor value exceeds 3Ω, efficiency drops because the external MOSFET experiences greater switching loss.

Inductor Selection

The inductor is a critical component in the switching regulator design, since it shapes steady-state operation, transient response, and loop stability. Important specifications for optimizing performance include inductance, DC resistance (DCR), and saturation current. Although the Boost stage can be designed to run in discontinuous conduction mode (DCM) at the maximum load — where the inductor current falls to zero each switching cycle — most applications achieve better efficiency in continuous conduction mode (CCM), where a DC current flows through the inductor. For this reason, Equations 8 and 9 below only apply to CCM operation. The SGM37560 supports inductance values from 10μH to 100μH, depending on the switching frequency. Higher switching frequencies allow smaller and/or lower-profile inductors around 10μH, while lower frequencies require larger values near 100μH to maintain the same current ripple, though they may improve overall efficiency by reducing switching losses. Inductance can vary by ±20% with no current bias. As the inductor approaches saturation, its value may drop by 20% to 35% from the 0A level, depending on the vendor's definition of saturation.

In a Boost regulator, the inductor DC current can be calculated with Equation 7.

$$I_{L_DC} = \frac{V_{OUT} \times I_{OUT}}{V_{IN} \times \eta} \quad (7)$$

Where V_{OUT} = output voltage, I_{OUT} = output current, V_{IN} = input voltage, η = power conversion efficiency.

The inductor current peak-to-peak ripple can be calculated with Equation 8.

$$\Delta I_{L(P-P)} = \frac{V_{IN} \times (V_{OUT} - V_{IN})}{L \times f_{SW} \times V_{OUT}} \quad (8)$$

Where $\Delta I_{L(P-P)}$ = inductor ripple current, L = inductor value, f_{SW} = switching frequency, V_{OUT} = output voltage, V_{IN} = input voltage.

Therefore, the inductor peak current is calculated with Equation 9.

$$I_{L(P)} = I_{L(DC)} + \frac{\Delta I_{L(P-P)}}{2} \quad (9)$$

Choose an inductor whose saturation-current rating is above the computed peak current. Determine the worst-case peak inductor current using the lowest input voltage, the highest output voltage, and the maximum load current.

Regulator efficiency depends on the resistance of the high-current path as well as the switching losses of the MOSFET and power diode. In addition to the external MOSFET, the inductor DCR also influences the overall efficiency. Typically, a lower DC resistance provides better efficiency. However, there is a trade-off between DCR and inductor size; additionally, shielded inductors generally have higher DCR than unshielded types.

Current Sense and Current Sense Filtering

R_{ISNS} sets the proper over-current limit protection. Efficiency can be assumed to be between 90% and 95%. Next, calculate the inductor peak current from the inductance L using Equations 8 and 9. The maximum R_{ISNS} can then be calculated as $R_{ISNS_MAX} = V_{ISNS}/I_{L_P}$. It is advisable to add 20% or more margin for component variations. A small filter on the ISNS pin (R_1 and C_1) improves converter performance. The filter time constant should be about 100ns. For best results, R_1 should be approximately 100Ω to 1kΩ. Place C_1 as close as possible to the ISNS pin to ensure noise immunity.

APPLICATION INFORMATION (continued)

Output Capacitor

Two considerations govern the choice of the output capacitor: the output-ripple specification and the loop stability of the complete system. Both the capacitance value and the equivalent series resistance (ESR) of the device determine how large the ripple voltage will be. If the ESR is taken as zero, the smallest capacitance capable of keeping the ripple within a specified limit follows the expression below:

$$V_{RIPPLE} = \frac{I_{OUT} \times D_{MAX}}{f_{SW} \times C_{OUT}} \quad (10)$$

Where V_{RIPPLE} is the peak-to-peak output voltage ripple, D_{MAX} is the maximum duty cycle of the Boost converter.

In practice, D_{MAX} can be approximated as (V_{OUT_MAX} − V_{IN_MIN})/V_{OUT_MAX}. When derating a capacitor under DC bias, however, extra attention is required. The DC bias also substantially lowers the effective capacitance. A ceramic capacitor may give up as much as half of its nominal capacitance when operated at its rated voltage. For this reason, the voltage rating should be chosen with margin so that sufficient capacitance remains available.

When tantalum or aluminum electrolytic type is chosen, their R_{ESR} contribution to the output ripple likewise has to be taken into account. If the capacitance is large enough for the capacitive ripple component to become negligible, the R_{ESR} required to keep V_{RIPPLE} within its limit is given by:

$$V_{RIPPLE_ESR} = I_{L(P)} \times R_{ESR} \quad (11)$$

Ripple current through a capacitor's R_{ESR} dissipates power, raising the capacitor's internal temperature. Excessive heat can significantly shorten its expected lifetime. Capacitors are rated for ripple current based on ambient temperature, and these limits must not be exceeded. Therefore, the typical application shown in Figure 6 uses a low-ESR electrolytic capacitor with a high ripple-current rating.

In a typical application, the output capacitor should be between 22μF and 220μF. This capacitor influences the small-signal loop stability of the Boost converter. If its value falls below this range, the Boost regulator may become unstable.

Loop Consideration

The COMP pin provides external compensation and permits the loop response to be optimized for application-specific requirements. COMP is the output of the internal transconductance amplifier. An external resistor (R_{COMP}) and ceramic capacitors (C_{COMP1}, C_{COMP2}) connected to COMP introduce additional poles and a zero. Together with the intrinsic pole and zero of the peak-current-mode Boost converter, these elements define the closed-loop frequency response, which is essential to converter's stability and transient performance.

The pole and the right half plane zero of the peak-current-mode Boost converter are obtained from Equation 12 and Equation 13.

$$f_P = \frac{2I_{OUT}}{2\pi V_{OUT} \times C_{OUT}} \quad (12)$$

$$f_{ZRHP} = \frac{V_{OUT} \times (1-D)^2}{2\pi L \times I_{OUT}} \quad (13)$$

For stable operation, the loop requires adequate phase margin at the crossover frequency, defined as the point where the loop gain equals unity. The crossover frequency should be set below 1/5 of f_{ZRHP} so that the zero in the right half plane does not compromise loop stability. The compensation components are then calculated with Equation 14 and Equation 15.

$$R_{COMP} = \frac{R_{ISNS} \times 2\pi f_{CO} \times C_{OUT}}{(1-D) \times Gm_{EA}} \times \frac{V_{OVP}}{V_{OVPTH}} \quad (14)$$

Where V_{OVPTH} = 3.05V (TYP) which is the internal reference for the output over-voltage protection setting voltage. Gm_{EA} is the trans-conductance of the error amplifier. Its typical value is 110μS. f_{CO} is the crossover frequency, which normally is less than 1/5 of the f_{ZRHP}.

$$C_{COMP1} = \frac{1}{2\pi f_P \times R_{COMP}} \quad (15)$$

where f_P is the pole's frequency of the power stage calculated by Equation 12.

If the output capacitor is the electrolytic capacitor, which may have large ESR, a capacitor is required to cancel the zero of the output capacitor. Equation 16 calculates the value of this capacitor.

$$C_{COMP2} = \frac{C_{OUT} \times R_{ESR}}{R_{COMP}} \quad (16)$$

Power Supply Recommendations

The SGM37560 operates from a single supply. The input voltage may be set anywhere from 6V to 36V, and the supply must be capable of sourcing the current demanded by the given application.

APPLICATION INFORMATION (continued)

Layout Guidelines

Layout deserves careful attention in any switching power supply, and particularly in designs that deliver high current at high switching frequency. A poorly executed layout may leave the regulator unstable and can also give rise to EMI. Therefore, high-current paths should be routed with traces that are both wide and short. C_{VDD}, the VDD capacitor in Figure 6, serves as the filter and noise-decoupling element for the internal linear regulator that supplies the on-chip digital circuitry; it should be mounted as near as possible between the VDD and PGND pins so that noise cannot be injected into those digital circuits. The switching node at the drain of Q1 conducts a large current with fast edges, so the connection from this node to the inductor and to the Schottky diode must be made as short and wide as the board allows. Because a substantial ripple current returns to the input ground, the ground terminal of output capacitor EC2 should sit close to that power ground, or be tied to it through a large ground plane. For signal grounds, short traces kept separate from the power-ground traces are recommended, with the two joined at a single point. R_{OVP1}, R_{OVP2}, R_{FSW}, R_{IFBV}, R_{ISET} and R_{FBP} (Figure 6) program the switching frequency, LED current, protection threshold and feedback voltage respectively. To keep coupled noise from reaching the pins and degrading accuracy, they should be placed close to the pins and returned to GND by short and wide traces.

Layout Example

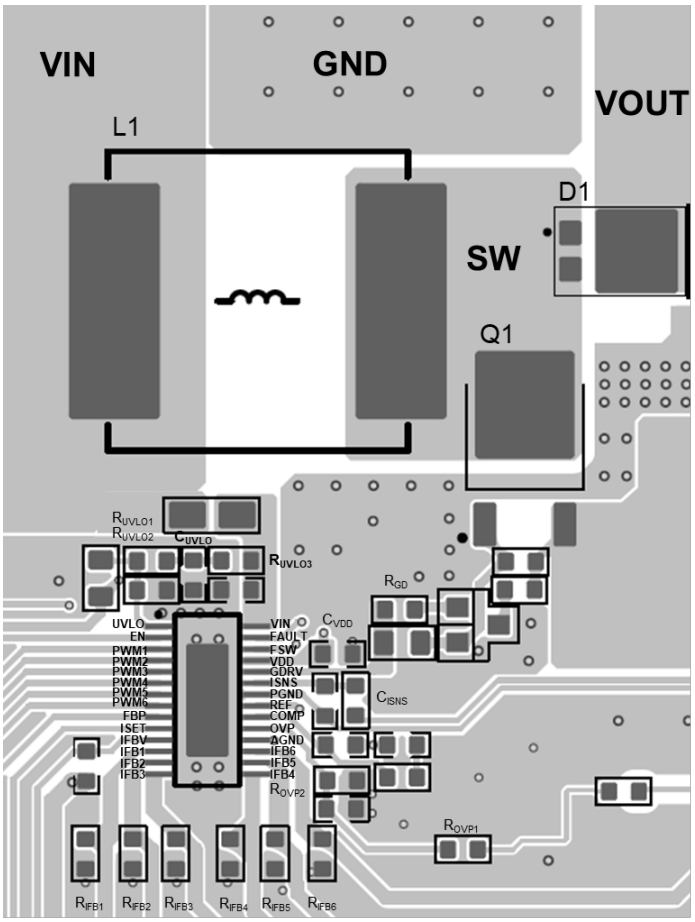

Figure 8. PCB Layout Example

REVISION HISTORY

NOTE: Page numbers for previous revisions may differ from page numbers in the current version.

Changes from Original to REV.A (NOVEMBER 2026)	Page
Changed from product preview to production data	All

PACKAGE OUTLINE DIMENSIONS

TSSOP-28 (Exposed Pad)

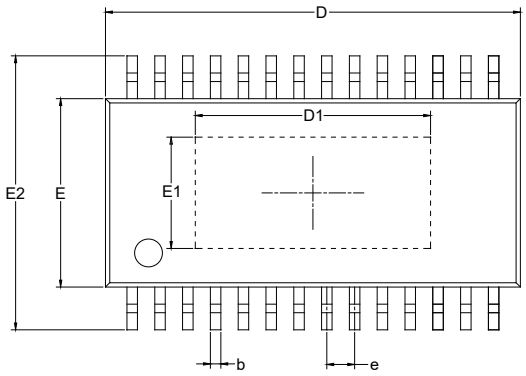

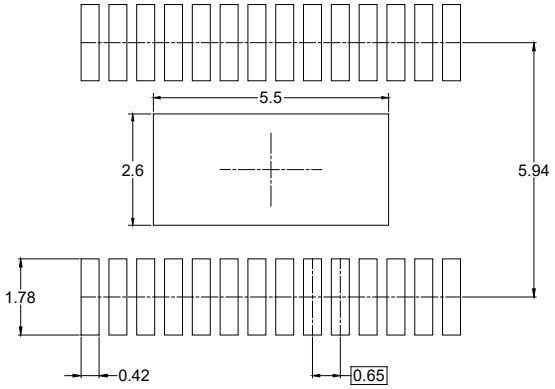

RECOMMENDED LAND PATTERN (Unit: mm)

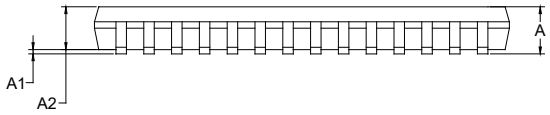

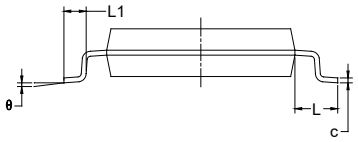

Symbol	Dimensions In Millimeters		Dimensions In Inches	
	MIN	MAX	MIN	MAX
A		1.200		0.047
A1	0.050	0.150	0.002	0.006
A2	0.800	1.050	0.031	0.041
b	0.190	0.300	0.007	0.012
c	0.090	0.200	0.004	0.008
D	9.600	9.800	0.378	0.386
D1	5.300	5.700	0.209	0.224
E	4.300	4.500	0.169	0.177
E1	2.400	2.800	0.094	0.110
E2	6.200	6.600	0.244	0.260
e	0.650 BSC		0.026 BSC	
L	1.000 BSC		0.039 BSC	
L1	0.450	0.750	0.018	0.030
θ	0°	8°	0°	8°

NOTES:

1. Body dimensions do not include mode flash or protrusion.
2. This drawing is subject to change without notice.
3. Reference JEDEC MO-153.

TAPE AND REEL INFORMATION

REEL DIMENSIONS

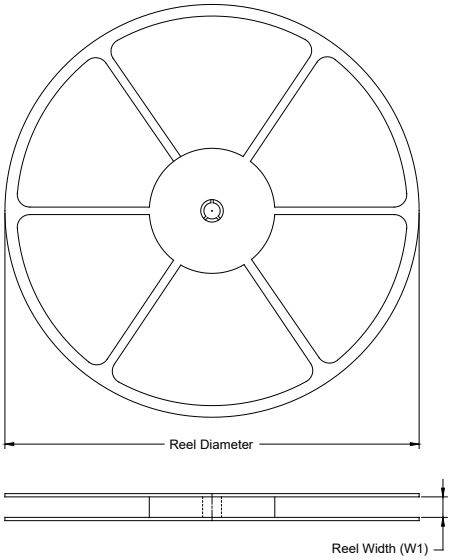

TAPE DIMENSIONS

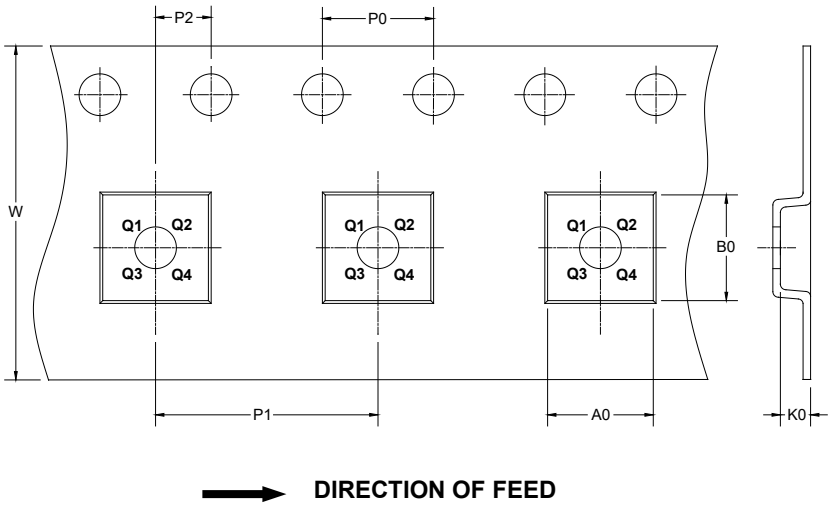

NOTE: The picture is only for reference. Please make the object as the standard.

KEY PARAMETER LIST OF TAPE AND REEL

Package Type	Reel Diameter	Reel Width W1 (mm)	A0 (mm)	B0 (mm)	K0 (mm)	P0 (mm)	P1 (mm)	P2 (mm)	W (mm)	Pin1 Quadrant
TSSOP-28 (Exposed Pad)	13"	16.4	6.80	10.25	1.60	4.0	8.0	2.0	16.0	Q1

DD0001

CARTON BOX DIMENSIONS

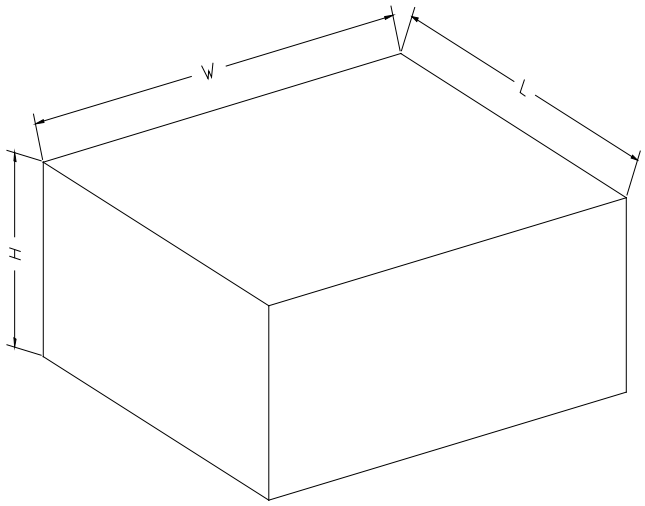

NOTE: The picture is only for reference. Please make the object as the standard.

KEY PARAMETER LIST OF CARTON BOX

Reel Type	Length (mm)	Width (mm)	Height (mm)	Pizza/Carton
13″	386	280	370	5

DD0002