# SGM7305
# 11-Channel SPDT/22-Bit to 11-Bit Multiplexer and Demultiplexer Ethernet LAN Switch with Power-Down Mode

## GENERAL DESCRIPTION

The SGM7305 is an 11-channel single-pole/double-throw (SPDT) analog switch, and can also be used as a 22-bit to 11-bit multiplexer or demultiplexer LAN switch. It features a channel select pin (SEL) to control the data path and a power-down control pin (PD) to minimize current consumption in standby mode. The device also offers extra I/O ports for switching status indication LEDs. Additionally, all I/O ports have robust ESD protection.

The SGM7305 features low and flat on-resistance ($R_{ON}$), low input/output capacitance, high bandwidth, low crosstalk among channels and low bit-to-bit skew. These features make it suitable for servers and routers with Ethernet interfaces, 10/100 Base-T signal switching and various LAN applications.

The SGM7305 is available in a Green TQFN-3.5×9-42L package.

## FEATURES

- **$V_{DD}$ Operating Range from 3V to 3.6V**
- **Bidirectional Data Flow**
- **Support Power-Down Mode Control**
- **Low Power Consumption, $I_{CC}$: 220μA (TYP)**
- **Low On-Resistance, $R_{ON}$: 4.2Ω (TYP)**
- **On Mode Capacitance, $C_{ON}$: 5pF (TYP)**
- **-3dB Bandwidth: 2.3GHz (TYP)**
- **Low Crosstalk, $X_{TALK}$: -41dB (TYP) at 250MHz**
- **Low Bit-to-Bit Skew, $t_{SK_O}$: 50ps (TYP)**
- **Rail-to-Rail Switching On Data I/O Ports (0V to 3.6V)**
- **Latch-Up Performance Exceeds 100mA Per JESD 78, Class II**
- **Available in a Green TQFN-3.5×9-42L Package**

## APPLICATIONS

Base-T Signal Switching
Servers and Routers with Ethernet Interfaces
LVDS and LVPECL Signal Switching
Notebooks and Docking Stations

# PACKAGE/ORDERING INFORMATION

| MODEL | PACKAGE DESCRIPTION | SPECIFIED TEMPERATURE RANGE | ORDERING NUMBER | PACKAGE MARKING | PACKING OPTION |
|---|---|---|---|---|---|
| SGM7305 | TQFN-3.5×9-42L | -40℃ to +125℃ | SGM7305XTUN42G/TR | SGM7305<br>XTUN42<br>XXXXX | Tape and Reel, 5000 |

## MARKING INFORMATION

NOTE: XXXXX = Date Code, Trace Code and Vendor Code.

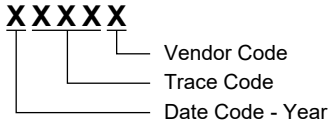


Green (RoHS & HSF): SG Micro Corp defines "Green" to mean Pb-Free (RoHS compatible) and free of halogen substances. If you have additional comments or questions, please contact your SGMICRO representative directly.

## ABSOLUTE MAXIMUM RATINGS

Supply Voltage, $V_{DD}$ ..... -0.5V to 4.6V
Control Input Voltage, $V_{IN}$ ..... -0.5V to 7V
Switch I/O Voltage, $V_{I/O}$ (1) ..... -0.5V to 7V
Control Input Clamp Current ($V_{IN}$ < 0V), $I_{IK}$ .....-50mA
I/O Port Clamp Current ($V_{I/O}$ < 0V), $I_{I/OK}$ .....-50mA
On-State Switch Current (2), $I_{I/O}$ .....128mA
Continuous Current through GND/$V_{DD}$ Pins .....100mA
Package Thermal Resistance
TQFN-3.5×9-42L, $\theta_{JA}$ ..... 9℃/W
TQFN-3.5×9-42L, $\theta_{JB}$ ..... 27℃/W
TQFN-3.5×9-42L, $\theta_{JC(TOP)}$..... 17.8℃/W
TQFN-3.5×9-42L, $\theta_{JC(BOT)}$..... 3.4℃/W
Junction Temperature .....+150℃
Storage Temperature Range .....-65℃ to +150℃
Lead Temperature (Soldering, 10s) .....+260℃
ESD Susceptibility (3) (4)
HBM.....±6000V
CDM .....±1500V

NOTES:

1. $V_I$ and $V_O$ indicate $V_{I/O}$ specific conditions.

2. $I_I$ and $I_O$ indicate $I_{I/O}$ specific conditions.

3. For human body model (HBM), all pins comply with ANSI/ESDA/JEDEC JS-001 specifications.

4. For charged device model (CDM), all pins comply with ANSI/ESDA/JEDEC JS-002 specifications.

## RECOMMENDED OPERATING CONDITIONS

Supply Voltage, $V_{DD}$ .....3V to 3.6V
High-Level Control Input Voltage (SEL, PD), $V_{IH}$...2V to 5.5V
Low-Level Control Input Voltage (SEL, PD), $V_{IL}$ ....0V to 0.8V
Input Voltage (SEL, PD), $V_{IN}$ .....0V to 5.5V
Input or Output Voltage, $V_{I/O}$.....0V to $V_{DD}$
Operating Ambient Temperature, $T_A$ ..... -40℃ to +125℃

## OVERSTRESS CAUTION

Stresses beyond those listed in Absolute Maximum Ratings may cause permanent damage to the device. Exposure to absolute maximum rating conditions for extended periods may affect reliability. Functional operation of the device at any conditions beyond those indicated in the Recommended Operating Conditions section is not implied.

## ESD SENSITIVITY CAUTION

This integrated circuit can be damaged if ESD protections are not considered carefully. SGMICRO recommends that all integrated circuits be handled with appropriate precautions. Failure to observe proper handling and installation procedures can cause damage. ESD damage can range from subtle performance degradation to complete device failure. Precision integrated circuits may be more susceptible to damage because even small parametric changes could cause the device not to meet the published specifications.

## DISCLAIMER

SG Micro Corp reserves the right to make any change in circuit design, or specifications without prior notice.

## PIN CONFIGURATION

**(TOP VIEW)**

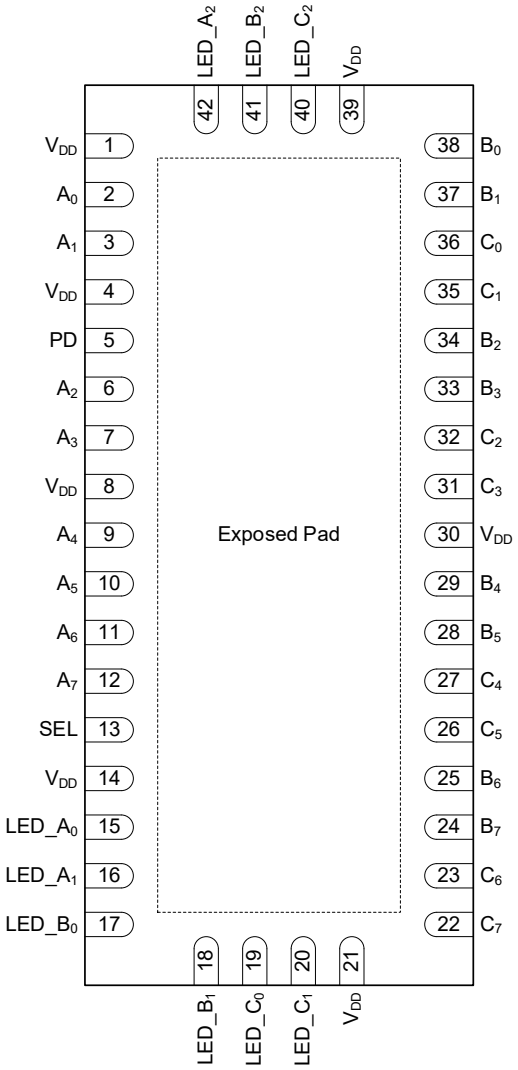


**TQFN-3.5×9-42L**

## PIN DESCRIPTION

| PIN | NAME | FUNCTION |
|---|---|---|
| 1, 4, 8, 14, 21, 30, 39 | $V_{DD}$ | Power Supply. |
| 2 | $A_0$ | I/O Signal Port $A_0$. |
| 3 | $A_1$ | I/O Signal Port $A_1$. |
| 5 | PD | Power-Down Control Pin. Active high. |
| 6 | $A_2$ | I/O Signal Port $A_2$. |
| 7 | $A_3$ | I/O Signal Port $A_3$. |
| 9 | $A_4$ | I/O Signal Port $A_4$. |
| 10 | $A_5$ | I/O Signal Port $A_5$. |
| 11 | $A_6$ | I/O Signal Port $A_6$. |
| 12 | $A_7$ | I/O Signal Port $A_7$. |
| 13 | SEL | Channel Select Pin. |
| 15 | LED_$A_0$ | I/O Signal Port LED_$A_0$. |
| 16 | LED_$A_1$ | I/O Signal Port LED_$A_1$. |
| 17 | LED_$B_0$ | I/O Signal Port LED_$B_0$. |
| 18 | LED_$B_1$ | I/O Signal Port LED_$B_1$. |
| 19 | LED_$C_0$ | I/O Signal Port LED_$C_0$. |
| 20 | LED_$C_1$ | I/O Signal Port LED_$C_1$. |
| 22 | $C_7$ | I/O Signal Port $C_7$. |
| 23 | $C_6$ | I/O Signal Port $C_6$. |
| 24 | $B_7$ | I/O Signal Port $B_7$. |
| 25 | $B_6$ | I/O Signal Port $B_6$. |
| 26 | $C_5$ | I/O Signal Port $C_5$. |
| 27 | $C_4$ | I/O Signal Port $C_4$. |
| 28 | $B_5$ | I/O Signal Port $B_5$. |
| 29 | $B_4$ | I/O Signal Port $B_4$. |
| 31 | $C_3$ | I/O Signal Port $C_3$. |
| 32 | $C_2$ | I/O Signal Port $C_2$. |
| 33 | $B_3$ | I/O Signal Port $B_3$. |
| 34 | $B_2$ | I/O Signal Port $B_2$. |
| 35 | $C_1$ | I/O Signal Port $C_1$. |
| 36 | $C_0$ | I/O Signal Port $C_0$. |
| 37 | $B_1$ | I/O Signal Port $B_1$. |
| 38 | $B_0$ | I/O Signal Port $B_0$. |
| 40 | LED_$C_2$ | I/O Signal Port LED_$C_2$. |
| 41 | LED_$B_2$ | I/O Signal Port LED_$B_2$. |
| 42 | LED_$A_2$ | I/O Signal Port LED_$A_2$. |
| Exposed Pad | GND | Connect Exposed Pad to Ground. |

## FUNCTIONAL BLOCK DIAGRAM

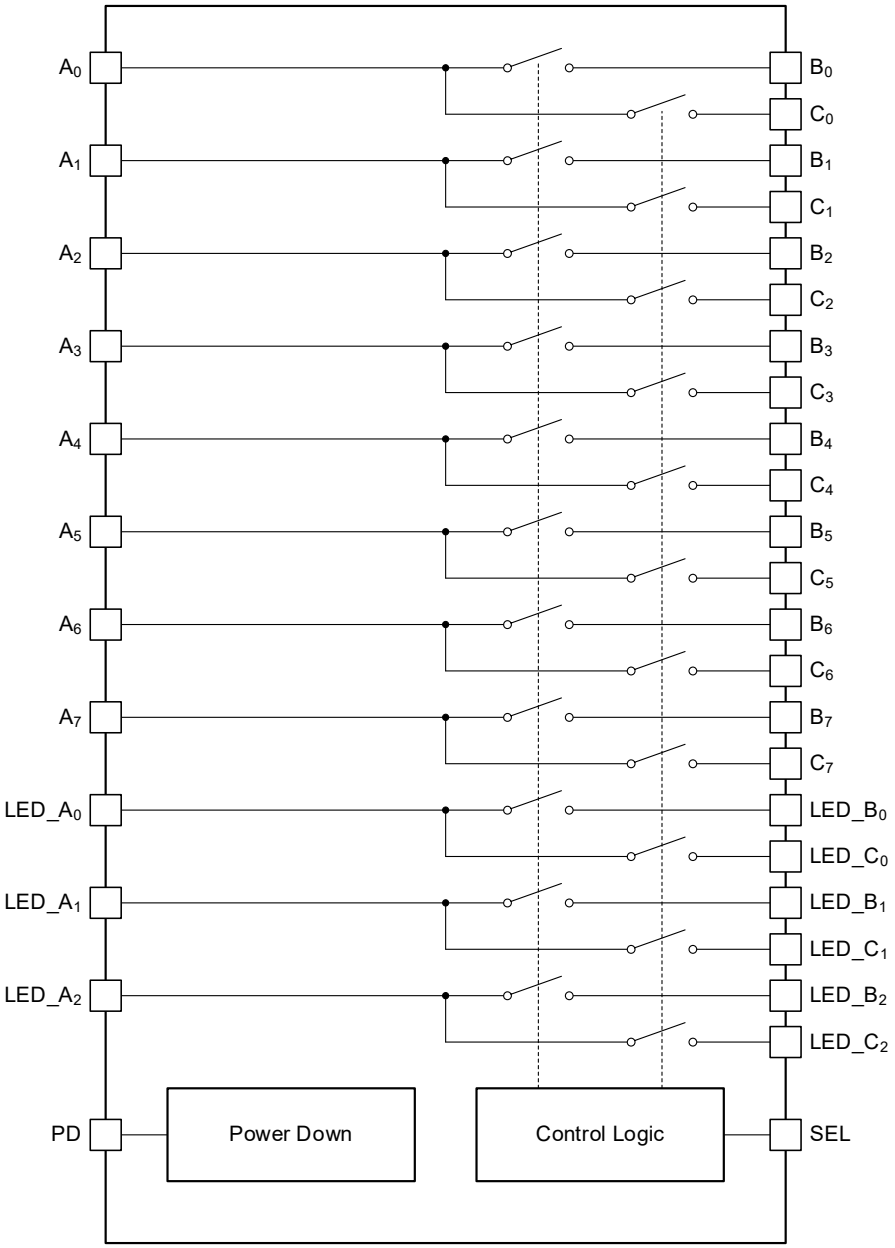


**Figure 1. Block Diagram**

## FUNCTION TABLE

| PD | SEL | FUNCTION |
|---|---|---|
| L | L | $A_n$ to $B_n$, LED_$A_n$ to LED_$B_n$ |
| L | H | $A_n$ to $C_n$, LED_$A_n$ to LED_$C_n$ |
| H | *X* | Hi-Z |

NOTE: *X* = Don't care.

# PACKAGE OUTLINE DIMENSIONS

## TQFN-3.5×9-42L

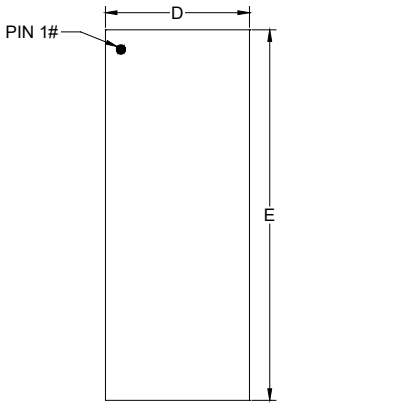


TOP VIEW

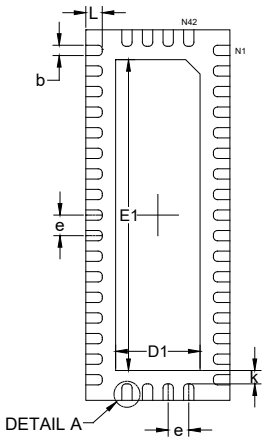


BOTTOM VIEW

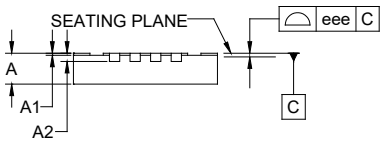


SIDE VIEW

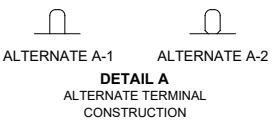


**DETAIL A**
ALTERNATE TERMINAL CONSTRUCTION

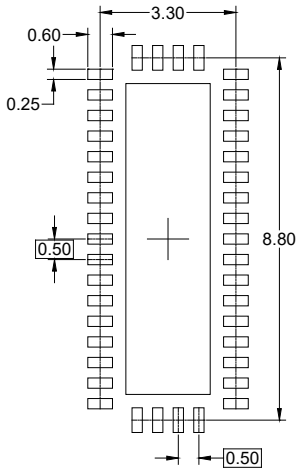


**RECOMMENDED LAND PATTERN** (Unit: mm)

| Symbol | Dimensions In Millimeters | | |
|---|---|---|---|
| | MIN | NOM | MAX |
| A | 0.700 | - | 0.800 |
| A1 | 0.000 | - | 0.050 |
| A2 | 0.200 REF | | |
| b | 0.200 | - | 0.300 |
| D | 3.400 | - | 3.600 |
| D1 | 1.950 | - | 2.150 |
| E | 8.900 | - | 9.100 |
| E1 | 7.450 | - | 7.650 |
| e | 0.500 BSC | | |
| k | 0.325 REF | | |
| L | 0.300 | - | 0.500 |
| eee | - | 0.080 | - |

NOTE: This drawing is subject to change without notice.

# TAPE AND REEL INFORMATION

## REEL DIMENSIONS

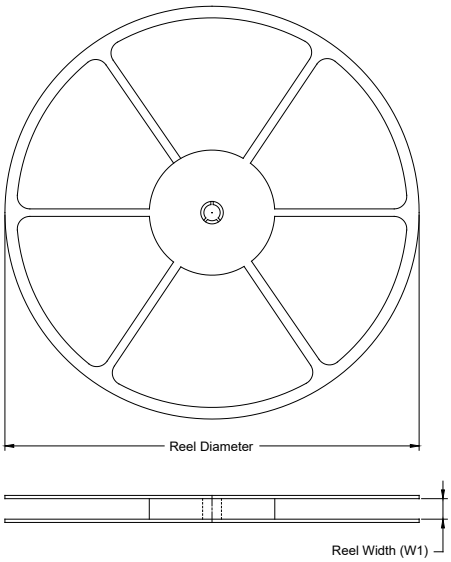


## TAPE DIMENSIONS

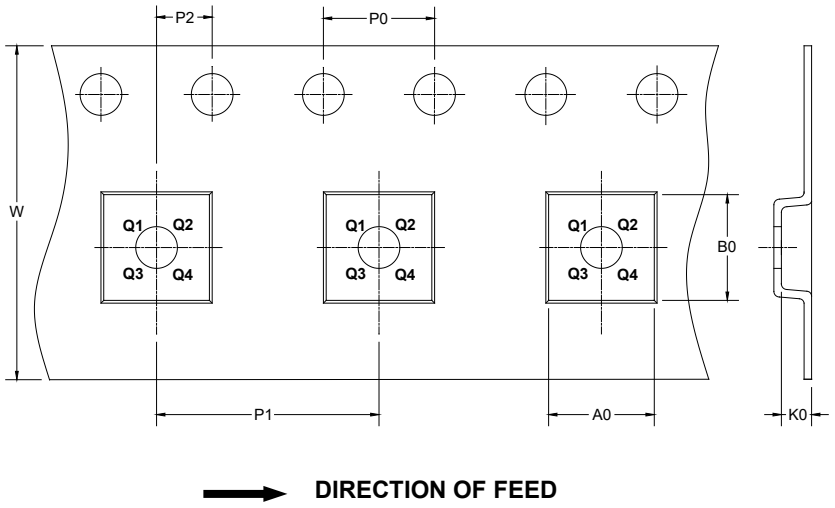


NOTE: The picture is only for reference. Please make the object as the standard.

## KEY PARAMETER LIST OF TAPE AND REEL

| Package Type | Reel Diameter | Reel Width W1 (mm) | A0 (mm) | B0 (mm) | K0 (mm) | P0 (mm) | P1 (mm) | P2 (mm) | W (mm) | Pin1 Quadrant |
|---|---|---|---|---|---|---|---|---|---|---|
| TQFN-3.5×9-42L | 13" | 16.4 | 3.75 | 9.25 | 0.95 | 4.0 | 8.0 | 2.0 | 16.0 | Q1 |

DD0001

## CARTON BOX DIMENSIONS

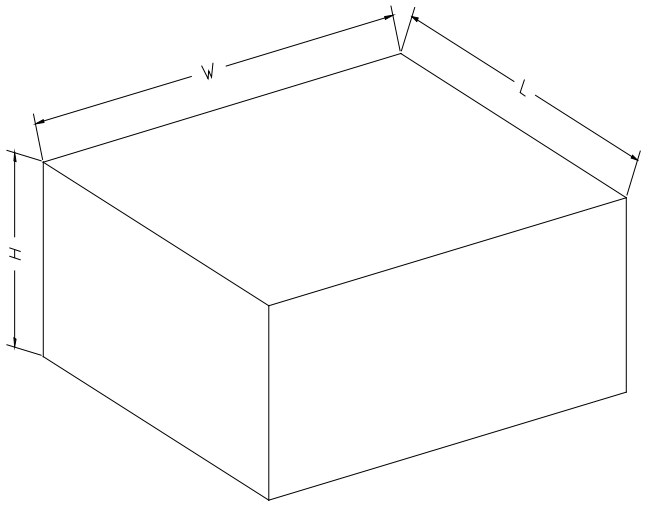


NOTE: The picture is only for reference. Please make the object as the standard.

## KEY PARAMETER LIST OF CARTON BOX

| Reel Type | Length (mm) | Width (mm) | Height (mm) | Pizza/Carton |
|---|---|---|---|---|
| 13″ | 386 | 280 | 370 | 5 |

DD0002