SGM42500S
3.6A Brushed DC Motor Driver

GENERAL DESCRIPTION

The SGM42500S device is a brushed DC motor driver. This device integrates four N-MOSFETs, which can supply up to 3.6A peak current at 40V voltage.

The SGM42500S supports IN1/IN2 PWM interface. The PWM signal can be implemented on the input interface to adjust motor speed. Customer can adjust PWM current limit or torque in real-time by VREF pin with a controller's DAC output or PWM signal after RC filter.

A number of protection features are provided in the device including over-current, short-circuit, under-voltage lockout and thermal shutdown. When the fault condition is removed, the device automatically resumes normal operation.

The SGM42500S is available in a Green SOIC-8 (Exposed Pad) package.

FEATURES

- **H-Bridge Motor Driver**
- **Operating Voltage Range: 7V to 40V**
- **Low On-Resistance: 0.41Ω (HS + LS) at +25℃**
- **3.6A Peak Output Current**
- **Interface: IN1/IN2**
- **Adjustable PWM Current Limit in Real-Time**
- **Low Power Standby Mode**
- **Integrated Protection Features**
  - **Over-Current Protection (OCP)**
  - **Under-Voltage Lockout (UVLO)**
  - **Thermal Shutdown (TSD)**
  - **Auto-Retry**
- **Available in a Green SOIC-8 (Exposed Pad) Package**

APPLICATIONS

Printers
Vacuum Cleaners Robotics
Industrial Pumps and Valves

TYPICAL APPLICATION

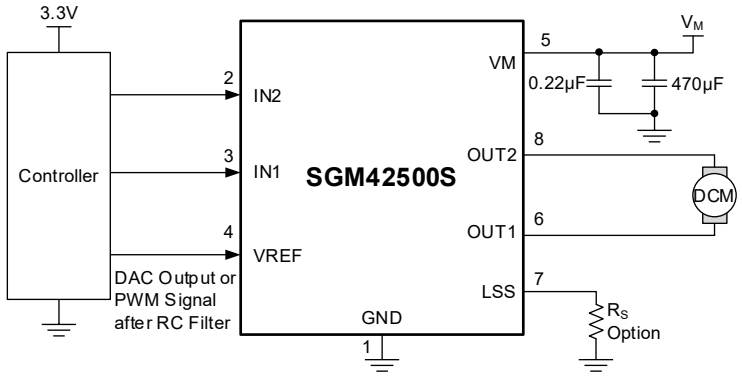

Figure 1. Typical Application Circuit

PACKAGE/ORDERING INFORMATION

MODEL	PACKAGE DESCRIPTION	SPECIFIED TEMPERATURE RANGE	ORDERING NUMBER	PACKAGE MARKING	PACKING OPTION
SGM42500S	SOIC-8 (Exposed Pad)	-40℃ to +125℃	SGM42500SXPS8G/TR	SGM 42500XPS8 XXXXX	Tape and Reel, 4000

MARKING INFORMATION

NOTE: XXXXX = Date Code, Trace Code and Vendor Code.

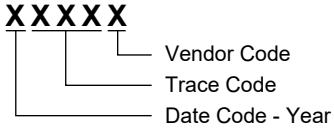

Green (RoHS & HSF): SG Micro Corp defines "Green" to mean Pb-Free (RoHS compatible) and free of halogen substances. If you have additional comments or questions, please contact your SGMICRO representative directly.

ABSOLUTE MAXIMUM RATINGS

Power Supply Voltage, V_M 45V
IN1, IN2..... -0.3V to 6V
VREF ..... -0.3V to 5V
LSS..... ±0.5V (DC Condition)
.....±2.5V (< 200ns)
Peak Output Current (Duty Cycle = 100%).....3.6A
Package Thermal Resistance
SOIC-8 (Exposed Pad), θ_{JA}..... 37℃/W
Junction Temperature .....+150℃
Storage Temperature Range.....-65℃ to +150℃
Lead Temperature (Soldering, 10s) .....+260℃
ESD Susceptibility
HBM.....2000V
CDM 1000V

RECOMMENDED OPERATING CONDITIONS

Power Supply Voltage, V_M .....7V to 40V
Logic Input PWM Frequency (IN1, IN2), f_{PWM} .....
.....0kHz to 100kHz
Junction Temperature Range .....-40℃ to +150℃
Ambient Temperature Range.....-40℃ to +125℃

OVERSTRESS CAUTION

Stresses beyond those listed in Absolute Maximum Ratings may cause permanent damage to the device. Exposure to absolute maximum rating conditions for extended periods may affect reliability. Functional operation of the device at any conditions beyond those indicated in the Recommended Operating Conditions section is not implied.

ESD SENSITIVITY CAUTION

This integrated circuit can be damaged if ESD protections are not considered carefully. SGMICRO recommends that all integrated circuits be handled with appropriate precautions. Failure to observe proper handling and installation procedures can cause damage. ESD damage can range from subtle performance degradation to complete device failure. Precision integrated circuits may be more susceptible to damage because even small parametric changes could cause the device not to meet the published specifications.

DISCLAIMER

SG Micro Corp reserves the right to make any change in circuit design, or specifications without prior notice.

PIN CONFIGURATION

SGM42500S (TOP VIEW)

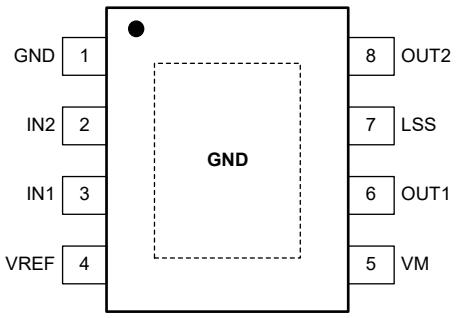

SOIC-8 (Exposed Pad)

PIN DESCRIPTION

PIN	NAME	TYPE	FUNCTION
1	GND	G	Ground.
2	IN2	I	Logic Input 2.
3	IN1	I	Logic Input 1.
4	VREF	I	Analog Input. Analog input to set current limit.
5	VM	P	Supply Voltage.
6	OUT1	O	H-Bridge Output 1. Output of H-bridge driving stage.
7	LSS	O	Power Return. Sense resistor connection (option) or connect to power pad ground directly.
8	OUT2	O	H-Bridge Output 2. Output of H-bridge driving stage.
Exposed Pad	GND	-	Exposed Pad. Exposed pad for enhanced thermal dissipation.

NOTE: I: input, O: output, G: ground, P: power for the circuit.

ELECTRICAL CHARACTERISTICS

(T_J = +25℃, unless otherwise noted.)

PARAMETER	SYMBOL	CONDITIONS	MIN	TYP	MAX	UNITS
Power Supply (VM)						
Power Supply Voltage	V_M		7		40	V
Power Supply Current	I_{VM}	V_M = 12V		2	3	mA
Standby Mode Supply Current	I_{VMQ}	V_M = 12V		3	5	μA
Logic Level Inputs						
Input Logic Low Voltage	V_{IL}	T_J = -40℃ to +125℃			0.5	V
Input Logic High Voltage	V_{IH}	T_J = -40℃ to +125℃	1.5			V
Input Logic Hysteresis	V_{HYS}			350		mV
Input Logic Low Current	I_{IL}	V_{IN} = 0V	-1		1	μA
Input Logic High Current	I_{IH}	V_{IN} = 3.3V		25	100	μA
Pull-Down Resistance	R_{PD}	To GND		130		kΩ
Propagation Delay Time	t_{PD}	INx to OUTx change		1.1		μs
Motor Driver Outputs (OUT1 and OUT2)						
High-side FET On-Resistance	R_{DSON}	V_M = 24V, I_{OUT} = 0.5A		250	300	mΩ
Low-side FET On-Resistance		V_M = 24V, I_{OUT} = 0.5A		160	190	mΩ
Body Diode Forward Voltage (1)	V_D	I_{OUT} = 1A		0.8		V
Timing						
Turn-On Time (2)	t_{ON}	V_M > V_{UVLO} with IN1 or IN2 high		130		μs
Slew Rate	t_R	V_M = 24V, OUTx rising from 10% to 90%		180		ns
	t_F	V_M = 24V, OUTx falling from 90% to 10%		30		
Crossover Delay	t_{COD}			400		ns
VREF Input Voltage Range	V_{REF}		0		4	V
VREF Voltage Gain	A_V	V_{REF}/V_{LSS}, V_{REF} = 2.5V	9.2	10	11.3	V/V
Constant Off-Time	t_{OFF}			12.5		μs
Standby Timer	t_{ST}	IN1 = IN2 = 0V		1	1.5	ms
Protection Circuits						
VM Under-Voltage Lockout	V_{UVLO}	V_M falls until UVLO triggers		6	6.6	V
		V_M rises until operation recovers		6.2	6.8	
VM Under-Voltage Hysteresis	V_{HYS}	Rising to falling threshold	100	200		mV
Over-Current Protection Trip Level	I_{OCP}			4		A
Over-Current Deglitch Time	t_{OCP}			2		μs
Over-Current Retry Time	t_{RETRY}			10		ms
Thermal Shutdown Temperature	T_{SD}			165		℃
Thermal Shutdown Temperature Hysteresis	T_{HYS}			30		℃

NOTES:

1. It is recommended that the maximum current of the body diode should be less than 1.5A.
2. t_{ON} applies when the device initially powers up, and when it exits standby mode.

PWM CONTROL TIMING DIAGRAM

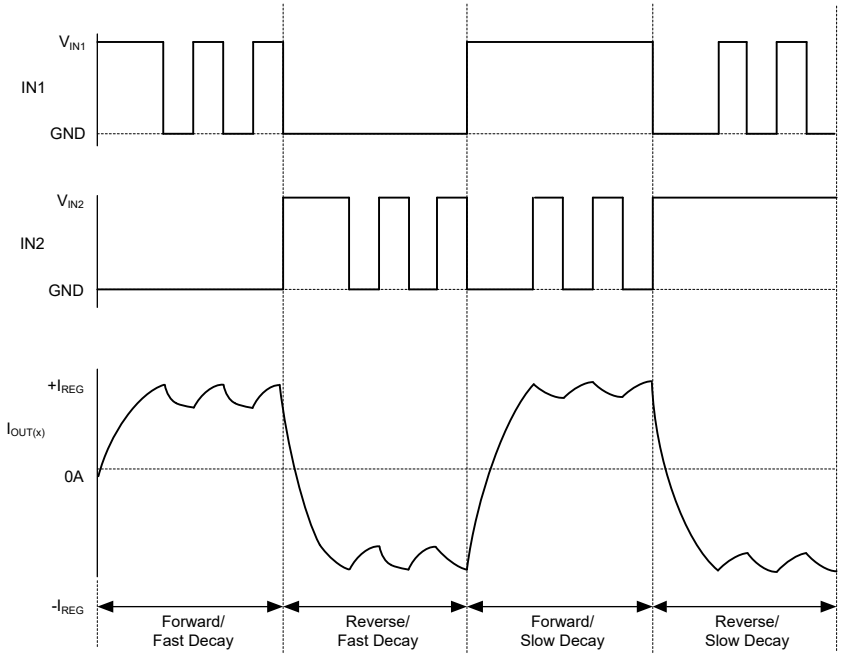

TRUTH TABLE

Table 1. SGM42500S PWM Control Truth Table

IN1	IN2	OUT1	OUT2	Function
0	1	L	H	Reverse
1	0	H	L	Forward
1	1	L	L	Brake (Slow Decay)
0	0	Z	Z	Coast, enter in the low power standby mode after 1ms. It will be a fast decay that discharges through the body diode.

NOTE: Z = high-impedance.

Table 2. SGM42500S PWM Decay Logic

IN1	IN2	Decay Logic
PWM	1	Slow Decay
PWM	0	Fast Decay
1	PWM	Slow Decay
0	PWM	Fast Decay

The inputs can also be used for PWM control, for example, the speed of a DC motor. The PWM signal can be applied to IN1 or IN2 pin.

If one input is set to high and the other input is set to PWM, the decay mode is slow decay. When IN1 is high and IN2 is PWM, the motor is running forward. When IN2 is high and IN1 is PWM, the motor is running reverse.

If one input is set to PWM and the other input is set to low, the decay mode is fast decay. When IN1 is PWM and IN2 is low, the motor is running forward. When IN2 is PWM and IN1 is low, motor is running reverse.

FUNCTIONAL BLOCK DIAGRAM

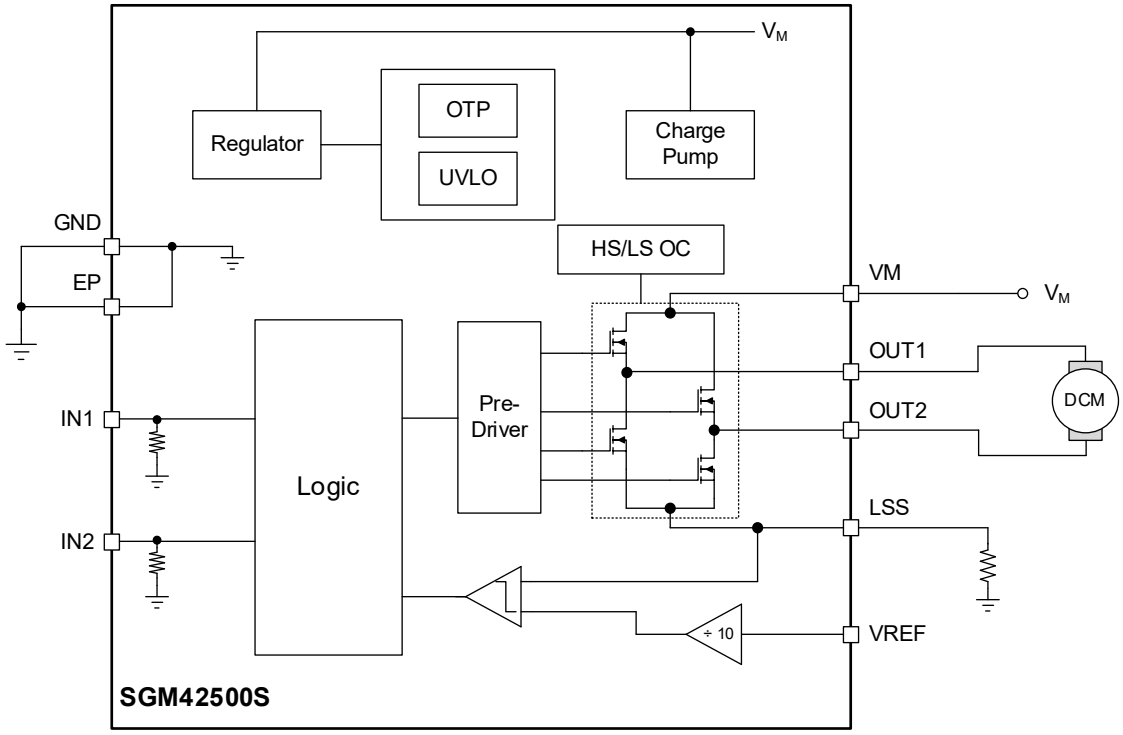

Figure 2. SGM42500S Functional Block Diagram

TYPICAL PERFORMANCE CHARACTERISTICS

R_{DSON} vs. Temperature

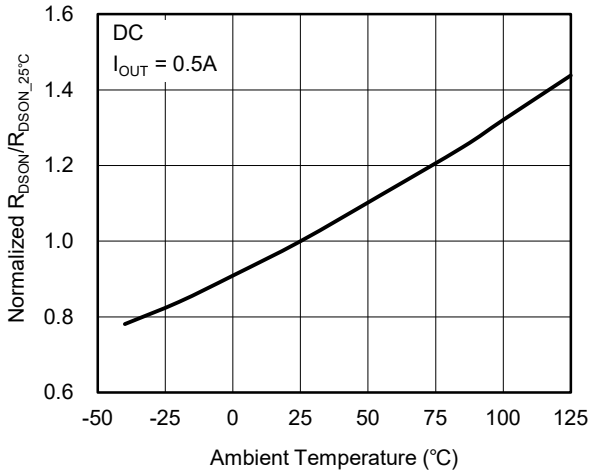

VREF Voltage Gain vs. VREF Voltage

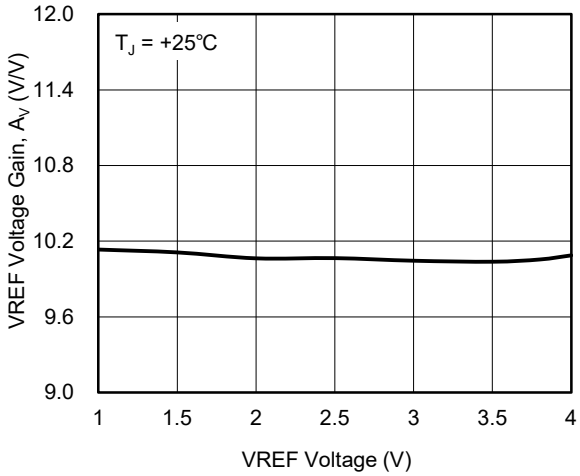

Standby Mode Supply Current vs. Power Supply Voltage

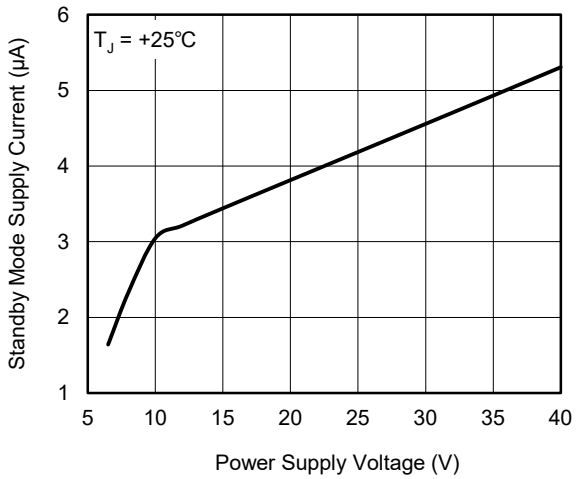

DETAILED DESCRIPTION

Device Operation

The SGM42500S is typically used to drive a DC motor. An internal charge pump generates the necessary gate-drive voltage. The SGM42500S operates from 7V to 40V motor power supply, which can supply a 3.6A peak current. Full protection features include over-current protection, under-voltage lockout and over-temperature protection.

Standby Mode

For SGM42500S, if both input pins (IN1/IN2) are low for longer than 1ms, the device will go to standby mode. If entering the standby mode, the output MOSFET, charge pump, and regulator are turned off for saving power.

Internal PWM Current Control

The current in the output is limited using fixed off-time control circuitry. If the motor current goes over the current limit setting, the two low-side MOSFETs are both turned on for t_{OFF} time, slow decay mode is used to adjust the current.

V_{REF}

The current limit is decided by V_{REF} and R_S together, please refer to Equation 1:

$$I_{TRIPMAX} = \frac{V_{REF}}{10 \times R_S} \quad (1)$$

Over-Current Protection (OCP)

Each MOSFET is protected by its own preset over-current limit. In case of an over-current (any direction), the whole bridge will be disabled (shutdown), and the device will retry after t_{RETRY}. An over-current will occur due to a short between a switching node and ground, VM supply line, or the other node of the bridge (a winding short).

Under-Voltage Lockout (UVLO)

If the voltage on VM pin falls below its under-voltage lockout threshold, the device will be disabled. The device resumes operation when the power supply goes back above UVLO thresholds.

Thermal Shutdown (TSD)

The driver is shutdown if a junction over-temperature occurs in the device. Once the temperature goes back to the safe level, the device resumes its operation.

APPLICATION INFORMATION

Sense Pin (LSS)

If PWM current control is used, it is recommended to place a low-value resistor between the LSS and GND pins for current sensing. In order to detect the output current, the ground trace IR drop should be minimized. Surface mounted and low inductance sense resistor is recommended. It is necessary to consider the package, since I^2 × R heat is generated in the sense resistor. And during PCB layout, place the resistor near to the motor driver as close as possible.

Ensure that the maximum voltage of LSS (±500mV) is not exceeded at the maximum load, and select the appropriate resistance value. This rating may be exceeded for a short time during an over-current event.

Ground and Layout Guidelines

The power supply VM is suggested to be decoupled with a bulk capacitor in parallel with a lower value ceramic capacitor placed as close as practicable to the device.

The exposed pad on the bottom of the device provides a path for heat dissipation. The pad should be soldered directly to an exposed surface on the PCB board to achieve better thermal performance. Thermal vias are also helpful to dissipate the heat.

It is good to have a low impedance single-point ground, known as a star ground, which is located close to the SGM42500S. The copper ground plane located under the device thermal pad is typically used as the star ground.

REVISION HISTORY

NOTE: Page numbers for previous revisions may differ from page numbers in the current version.

Changes from Original to REV.A (NOVEMBER 2026)	Page
Changed from product preview to production data	All

PACKAGE OUTLINE DIMENSIONS

SOIC-8 (Exposed Pad)

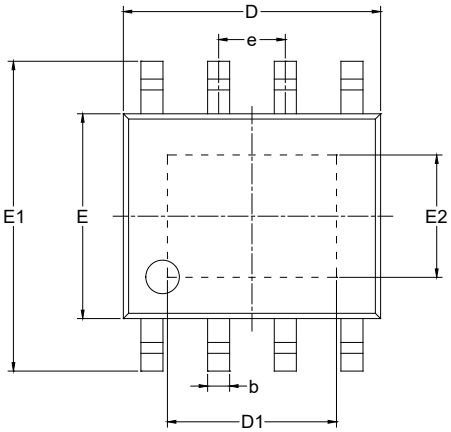

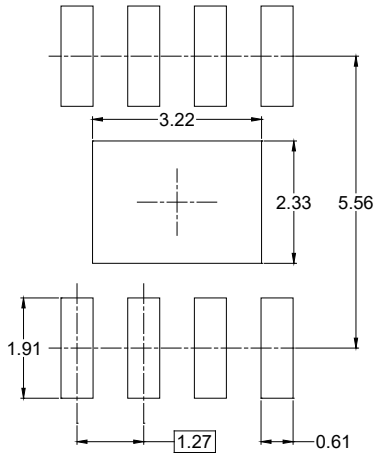

RECOMMENDED LAND PATTERN (Unit: mm)

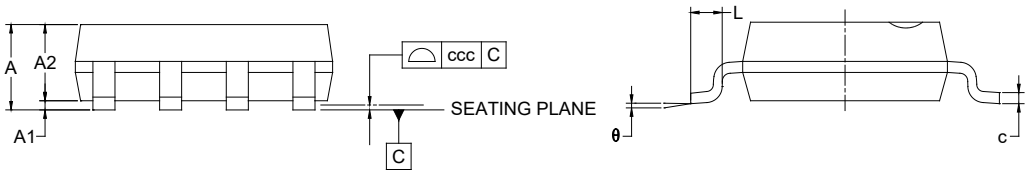

Symbol	Dimensions In Millimeters		
	MIN	NOM	MAX
A			1.700
A1	0.000	-	0.150
A2	1.250	-	1.650
b	0.330	-	0.510
c	0.170	-	0.250
D	4.700	-	5.100
D1	3.020	-	3.420
E	3.800	-	4.000
E1	5.800	-	6.200
E2	2.130	-	2.530
e	1.27 BSC		
L	0.400	-	1.270
θ	0°	-	8°
ccc	0.100		

NOTES:
1. This drawing is subject to change without notice.
2. The dimensions do not include mold flashes, protrusions or gate burrs.
3. Reference JEDEC MS-012.

TAPE AND REEL INFORMATION

REEL DIMENSIONS

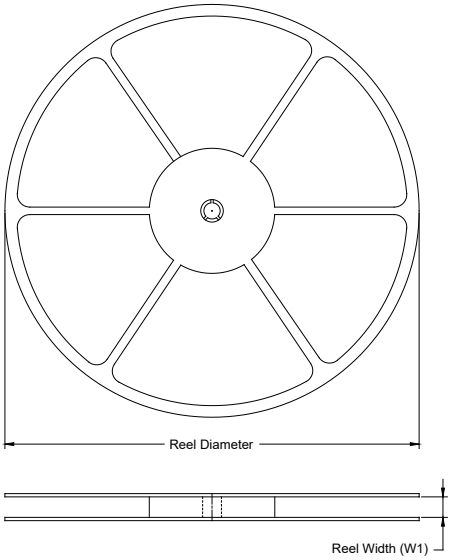

TAPE DIMENSIONS

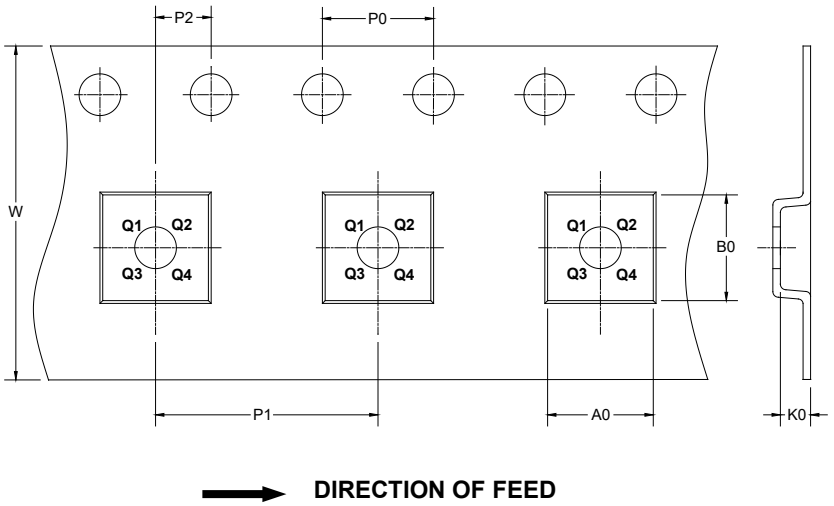

NOTE: The picture is only for reference. Please make the object as the standard.

KEY PARAMETER LIST OF TAPE AND REEL

Package Type	Reel Diameter	Reel Width W1 (mm)	A0 (mm)	B0 (mm)	K0 (mm)	P0 (mm)	P1 (mm)	P2 (mm)	W (mm)	Pin1 Quadrant
SOIC-8 (Exposed Pad)	13″	12.4	6.40	5.40	2.10	4.0	8.0	2.0	12.0	Q1

DD0001

CARTON BOX DIMENSIONS

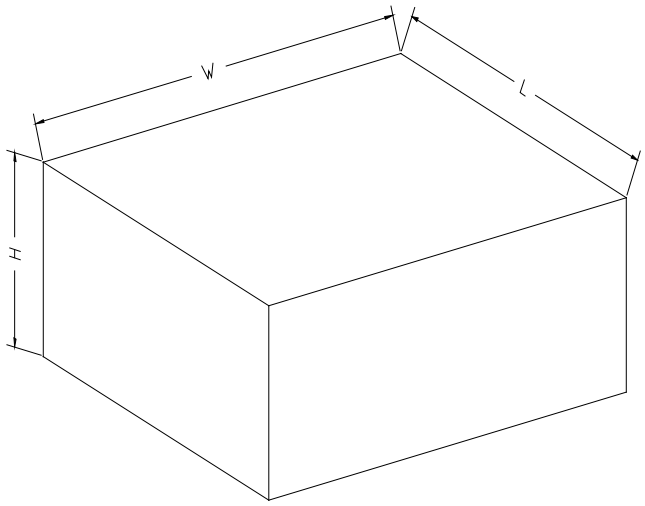

NOTE: The picture is only for reference. Please make the object as the standard.

KEY PARAMETER LIST OF CARTON BOX

Reel Type	Length (mm)	Width (mm)	Height (mm)	Pizza/Carton
13″	386	280	370	5

DD0002