SGM70835A
Dual, High-Precision, High Voltage, Current-Sense Amplifier

GENERAL DESCRIPTION

The SGM70835A has a wide input common-mode voltage range from -4V to 120V, and is available with 20V/V gain. The bandwidth of small-signal can reach up to 300kHz. And the REF_EN pin can control the reference voltage of OUT1 and OUT2.

The SGM70835A is available in a Green TDFN-3×3-10L package.

APPLICATIONS

Communication Equipment
Servers
Battery Chargers
Industrial Control
Automation Equipment
Energy Management

FEATURES

- **Input Common-Mode Voltage Range: -4V to 120V**
- **Low Input Offset Voltage: ±450μV (MAX)**
- **Gain: 20V/V**
- **Low Gain Error: 0.32% (MAX)**
- **Available in a Green TDFN-3×3-10L Package**

TYPICAL APPLICATION

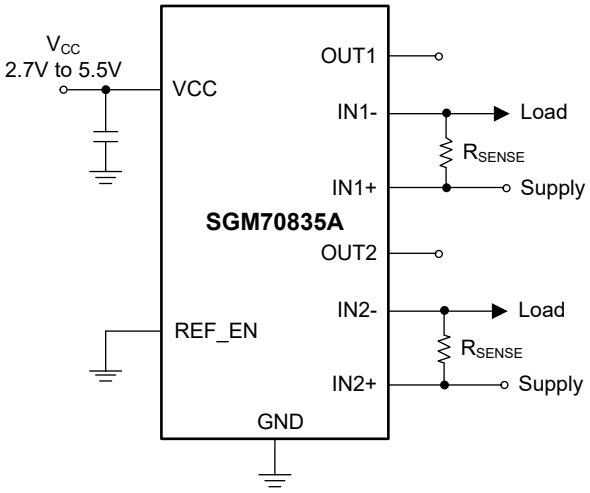

Figure 1. Simplified Typical Application Circuit

PACKAGE/ORDERING INFORMATION

MODEL	PACKAGE DESCRIPTION	SPECIFIED TEMPERATURE RANGE	GAIN (V/V)	ORDERING NUMBER	PACKAGE MARKING	PACKING OPTION
SGM70835A	TDFN-3×3-10L	-40℃ to +125℃	20	SGM70835AXTD10G/TR	SGM 2CKD XXXXX	Tape and Reel, 4000

MARKING INFORMATION

XXXXX = Date Code, Trace Code and Vendor Code.

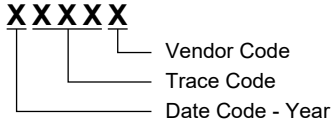

Green (RoHS & HSF): SG Micro Corp defines "Green" to mean Pb-Free (RoHS compatible) and free of halogen substances. If you have additional comments or questions, please contact your SGMICRO representative directly.

ABSOLUTE MAXIMUM RATINGS

VCC to GND ..... -0.3V to 6V
INx+, INx- to GND ..... -4V to 120V
INx+ to INx- ..... ±100V
REF_EN Voltage ..... -0.3V to 6V
Continuous Input Current at Any Pin ..... ±20mA
Package Thermal Resistance
TDFN-3×3-10L, θ_{JA} ..... 50.5℃/W
TDFN-3×3-10L, θ_{JB} ..... 23.2℃/W
TDFN-3×3-10L, $\theta_{JC\ (TOP)}$ ..... 44.3℃/W
TDFN-3×3-10L, $\theta_{JC\ (BOT)}$ ..... 13.2℃/W
Junction Temperature ..... +150℃
Storage Temperature Range ..... -65℃ to +150℃
Lead Temperature (Soldering, 10s) ..... +260℃
ESD Susceptibility (1) (2)
HBM ..... ±4000V
CDM ..... ±2000V

NOTES:

1. For human body model (HBM), all pins comply with ANSI/ESDA/JEDEC JS-001 specifications.

2. For charged device model (CDM), all pins comply with ANSI/ESDA/JEDEC JS-002 specifications.

RECOMMENDED OPERATING CONDITIONS

Supply Voltage Range ..... 2.7V to 5.5V
Operating Junction Temperature Range ..... -40℃ to +125℃

OVERSTRESS CAUTION

Stresses beyond those listed in Absolute Maximum Ratings may cause permanent damage to the device. Exposure to absolute maximum rating conditions for extended periods may affect reliability. Functional operation of the device at any conditions beyond those indicated in the Recommended Operating Conditions section is not implied.

ESD SENSITIVITY CAUTION

This integrated circuit can be damaged if ESD protections are not considered carefully. SGMICRO recommends that all integrated circuits be handled with appropriate precautions. Failure to observe proper handling and installation procedures can cause damage. ESD damage can range from subtle performance degradation to complete device failure. Precision integrated circuits may be more susceptible to damage because even small parametric changes could cause the device not to meet the published specifications.

DISCLAIMER

SG Micro Corp reserves the right to make any change in circuit design, or specifications without prior notice.

PIN CONFIGURATION

(TOP VIEW)

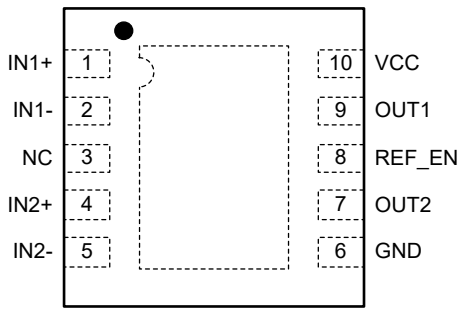

TDFN-3×3-10L

PIN DESCRIPTION

PIN	NAME	TYPE	FUNCTION
1	IN1+	AI	Power-Side Connection Pin. Channel 1.
2	IN1-	AI	Load-Side Connection Pin. Channel 1.
3	NC	—	No Connection. Keep it floating or connect it to GND.
4	IN2+	AI	Power-Side Connection Pin. Channel 2.
5	IN2-	AI	Load-Side Connection Pin. Channel 2.
6	GND	G	Ground.
7	OUT2	AO	Output Pin. Channel 2.
8	REF_EN	DI	Reference Voltage Enable Pin. Pull this pin high to enable the device, and pull it low to disable the device. Do not leave it floating.
9	OUT1	AO	Output Pin. Channel 1.
10	VCC	P	Supply Voltage Pin. Connect a 0.1μF capacitor from VCC to GND close to the device.
Exposed Pad	EP	—	Exposed Pad. Keep it floating.

NOTE: AI = analog input, AO = analog output, DI = digital input, P = power, G = ground.

ELECTRICAL CHARACTERISTICS

(V_{IN+} = V_{IN-} = 100V, V_{CC} = 3.3V, V_{SENSE} = V_{IN+} - V_{IN-} = 1mV, T_J = -40℃ to +125℃, typical values are at T_J = +25℃, unless otherwise noted.)

PARAMETER	SYMBOL	CONDITIONS	MIN	TYP	MAX	UNITS
DC Characteristics						
Supply Voltage	V_{CC}	Guaranteed for PSRR	2.7		5.5	V
Supply Current	I_{DD}	T_J = +25℃		540	660	μA
		T_J = -40℃ to +125℃			750	
Power Supply Rejection Ratio	PSRR	V_{CC} = 2.7V to 5.5V, T_J = -40℃ to +125℃	88	105		dB
Input Common-Mode Voltage Range	V_{CM}	Guaranteed for CMRR	-4		120	V
Input Bias Current at V_{IN+} and V_{IN-}	I_{IN+}, I_{IN-}			50		nA
Input Offset Current	I_{IN+}, I_{IN-}			10		nA
Input Leakage Current	I_{IN+}, I_{IN-}	V_{CC} = 0V, V_{IN+} = 100V		50		nA
Common-Mode Rejection Ratio	CMRR	V_{IN+} = -4V to 120V, T_J = -40℃ to +125℃	120	136		dB
Input Offset Voltage	V_{OS}	T_J = +25℃		±110	±350	μV
		T_J = -40℃ to +125℃			±450	
Input Offset Voltage Drift	$\Delta V_{OS}/\Delta T$	V_{IN+} = 100V			±1.52	μV/℃
Input Sense Voltage	V_{SENSE}			125		mV
Gain (1)	G	Full-scale		20		V/V
Gain Error	GE	T_J = +25℃			±0.18	%
		T_J = -40℃ to +125℃		±0.03	±0.32	
Gain Error Drift	$\Delta GE/\Delta T$			5.6	11	ppm/℃
Output Resistance	R_{OUT}			200		mΩ
Output Low Voltage	V_{OL}	I_{SINK} = 500μA			25	mV
		No load			10	
Output High Voltage	V_{OH}	I_{SOURCE} = 500μA	V_{CC} - 0.022			V
REF_EN High-Level Threshold Voltage	V_{IL}				0.3 × V_{CC}	V
REF_EN Low-Level Threshold Voltage	V_{IH}		0.7 × V_{CC}			V
Reference Voltage	V_{REF}	T_J = +25℃	0.210	0.225	0.246	V
		T_J = -40℃ to +125℃	0.205		0.250	V
Reference Voltage Drift	$\Delta V_{REF}/\Delta T$				±1.37	μV/℃
Output Voltage Drift	$\Delta V_{OUT}/\Delta T$	REF_EN = High, V_{SENSE} = 100mV			±1.8	μV/℃
AC Characteristics						
-3dB Signal Bandwidth	BW	REF_EN = H, 0.1mV ≤ V_{SENSE} < 0.5mV		300		kHz
		REF_EN = H, 0.5mV ≤ V_{SENSE} < 1mV		300		
		REF_EN = H, V_{SENSE} ≥ 1mV		300		
		REF_EN = L, 0.1mV ≤ V_{SENSE} < 0.5mV		50		
		REF_EN = L, 0.5mV ≤ V_{SENSE} < 1mV		100		
		REF_EN = L, 1mV ≤ V_{SENSE} < 10mV		200		
		REF_EN = L, V_{SENSE} ≥ 10mV		300		
AC Power Supply Rejection Ratio	AC PSRR	f = 200kHz, no certain capacitor between VCC and GND		50		dB
		f = 1MHz, 1μF capacitor between VCC and GND		30		
AC Common-Mode Rejection Ratio	AC CMRR	f = 10kHz		75		dB
		f = 200kHz		58		

ELECTRICAL CHARACTERISTICS (continued)

(V_{IN+} = V_{IN-} = 100V, V_{CC} = 3.3V, V_{SENSE} = V_{IN+} - V_{IN-} = 1mV, T_J = -40℃ to +125℃, typical values are at T_J = +25℃, unless otherwise noted.)

PARAMETER	SYMBOL	CONDITIONS	MIN	TYP	MAX	UNITS
Output Transient Recovery Time		ΔV_{OUT} = $2V_{P-P}$, 14-bit settling with 400Ω and 6nF ADC sampling capacitor		18		μs
Capacitive Load Stability	C_{LOAD}	With 250Ω isolation resistor		20		nF
		Without any isolation resistor		200		pF
Input Voltage Noise Density	e_n	f = 1kHz		85		nV/√Hz
Total Harmonic Distortion (Up to 7th Harmonics)	THD	f = 1kHz, V_{OUT} = $1V_{P-P}$		70		dB
Power-up Time (2)		V_{SENSE} = 10mV		120		μs
Saturation Recovery Time				8		μs

NOTES:

1. Calculate the gain and offset voltage with the measured values of V_{SENSE1} and V_{SENSE2}. V_{SENSE1} = 20% × full-scale V_{SENSE}. V_{SENSE2} = 80% × full-scale V_{SENSE}.
2. The output is in a high impedance state during power-up.

FUNCTIONAL BLOCK DIAGRAM

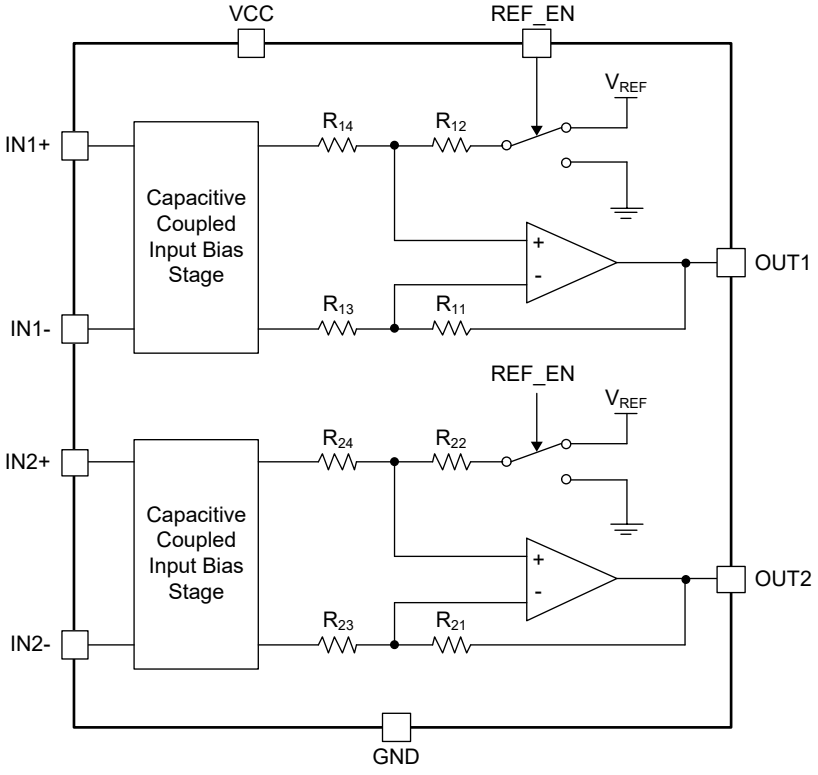

Figure 2. Functional Block Diagram

TYPICAL PERFORMANCE CHARACTERISTICS

V_{IN+} = V_{IN-} = 100V, V_{CC} = 3.3V, V_{SENSE} = V_{IN+} - V_{IN-} = 1mV, T_J = +25℃, unless otherwise noted.

Supply Current vs. Temperature

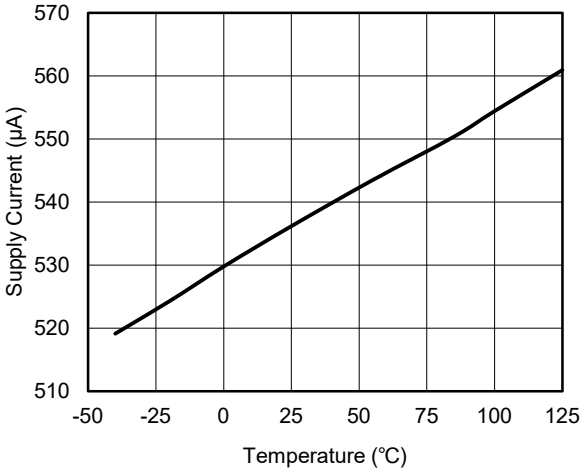

Reference Voltage vs. Temperature

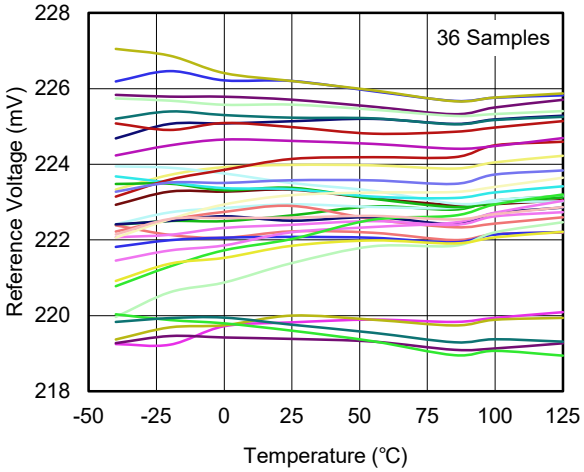

Input Offset Voltage vs. Temperature

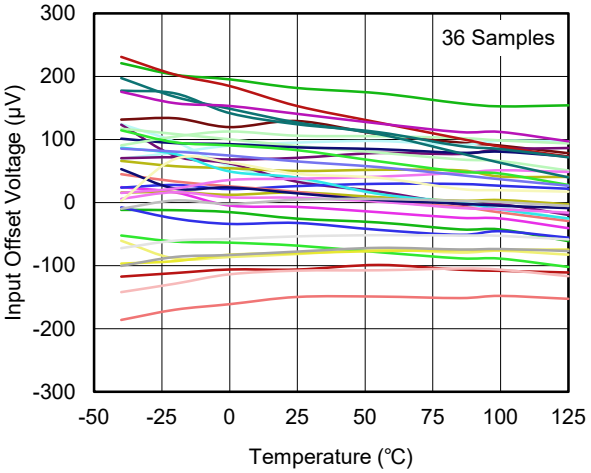

Gain Error vs. Temperature

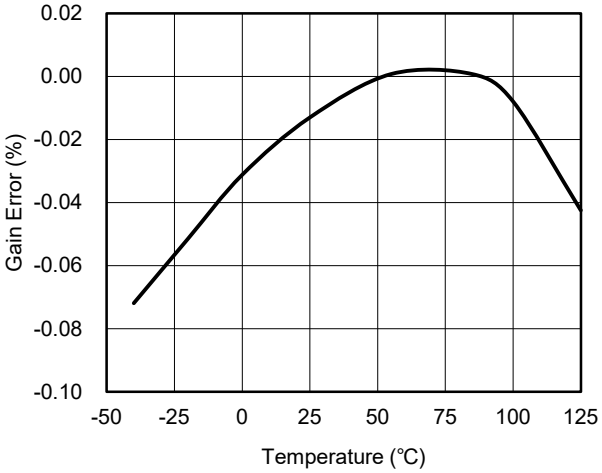

Output Voltage High vs. Source Current

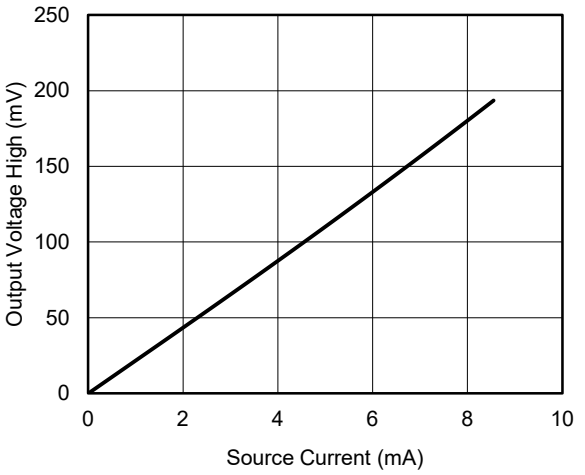

Output Voltage Low vs. Sink Current

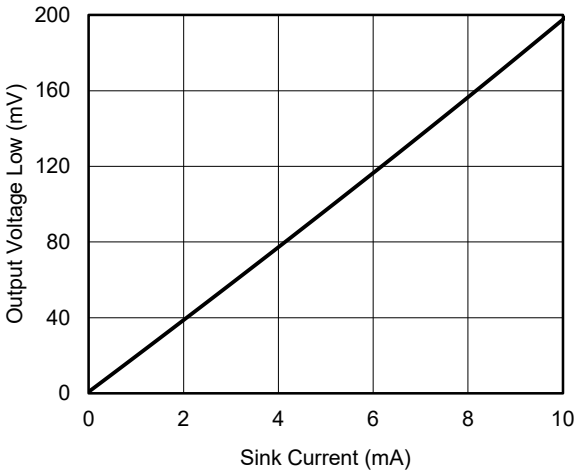

TYPICAL PERFORMANCE CHARACTERISTICS (continued)

V_{IN+} = V_{IN-} = 100V, V_{CC} = 3.3V, V_{SENSE} = V_{IN+} - V_{IN-} = 1mV, T_J = +25℃, unless otherwise noted.

Supply Current vs. Supply Voltage

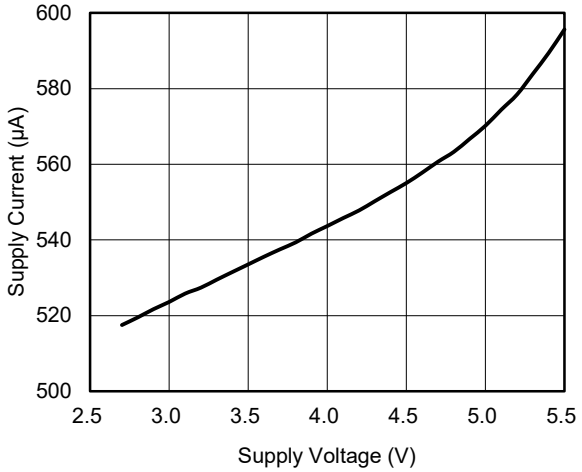

Reference Voltage vs. Supply Voltage

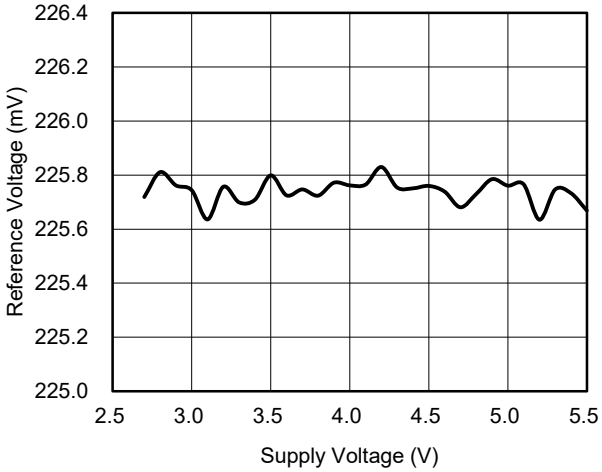

Input Offset Voltage vs. Common-Mode Voltage

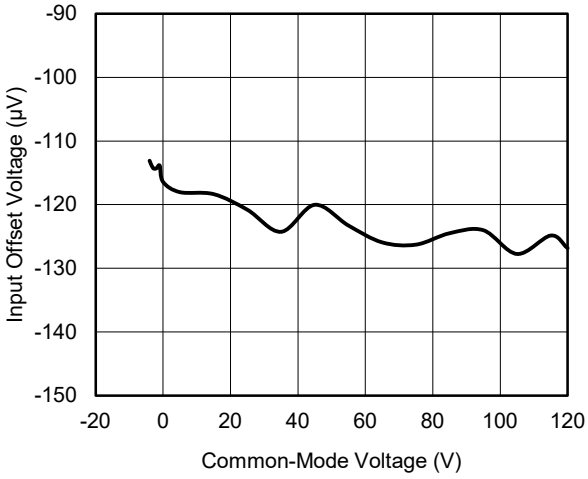

Gain Error vs. Common-Mode Voltage

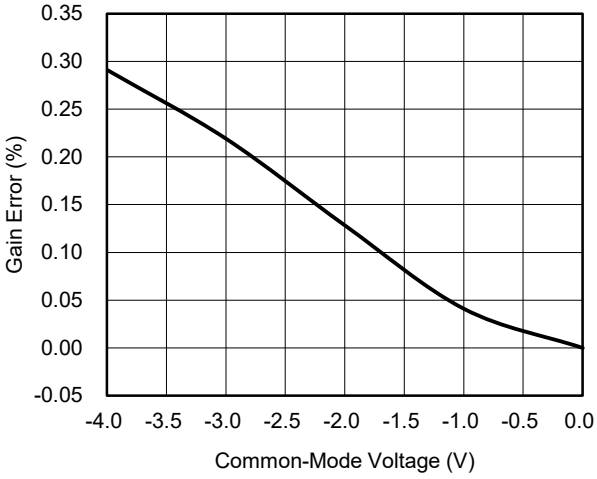

Gain Error vs. Common-Mode Voltage

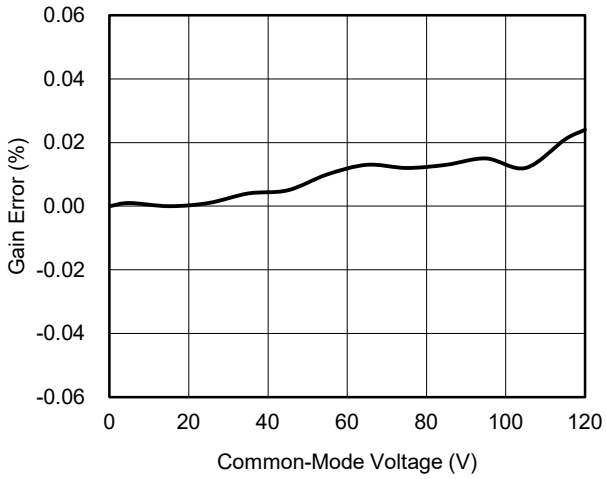

Input Offset Voltage Histogram

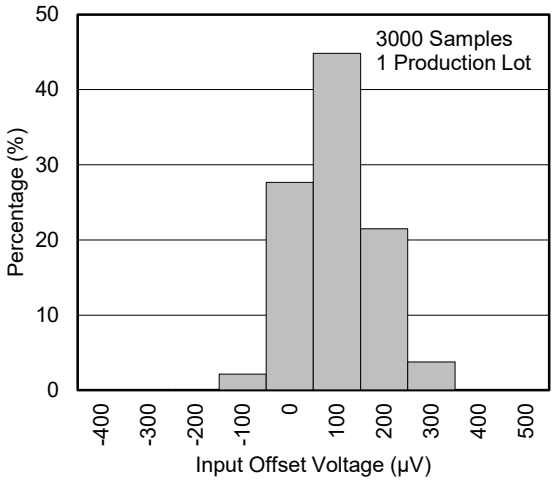

TYPICAL PERFORMANCE CHARACTERISTICS (continued)

V_{IN+} = V_{IN-} = 100V, V_{CC} = 3.3V, V_{SENSE} = V_{IN+} - V_{IN-} = 1mV, T_J = +25℃, unless otherwise noted.

Reference Voltage Histogram

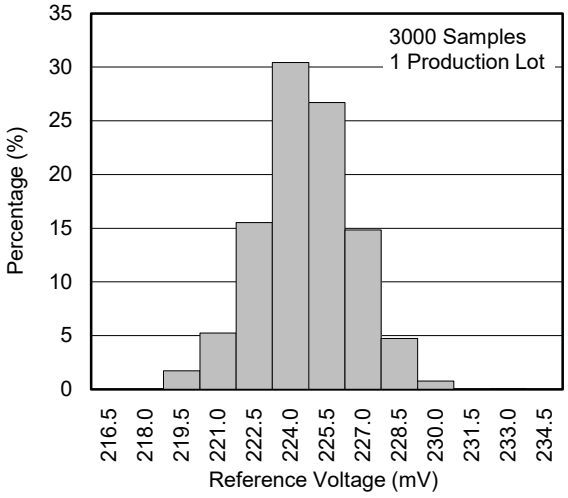

Total Harmonic Distortion vs. Frequency

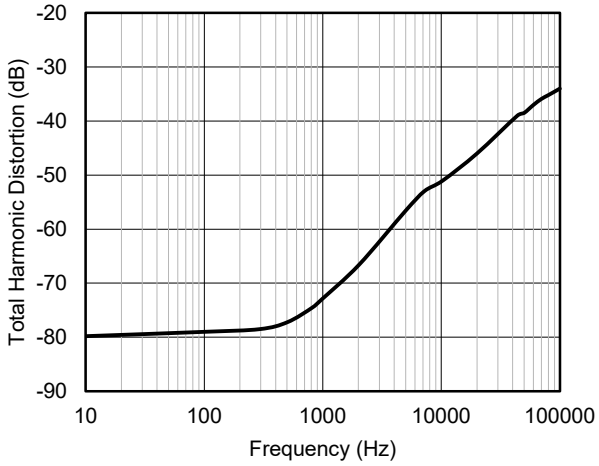

CMRR vs. Frequency

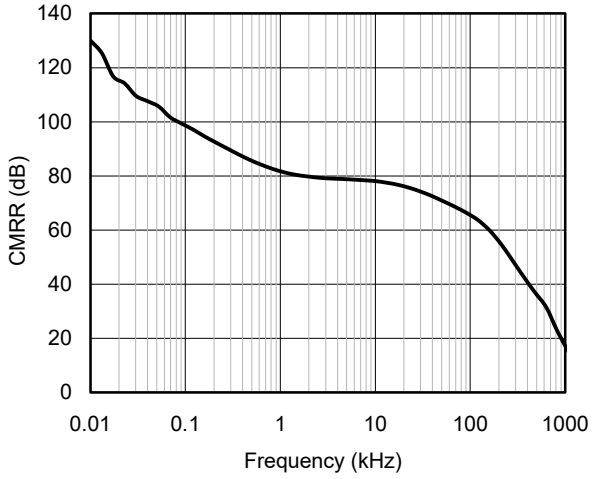

PSRR vs. Frequency

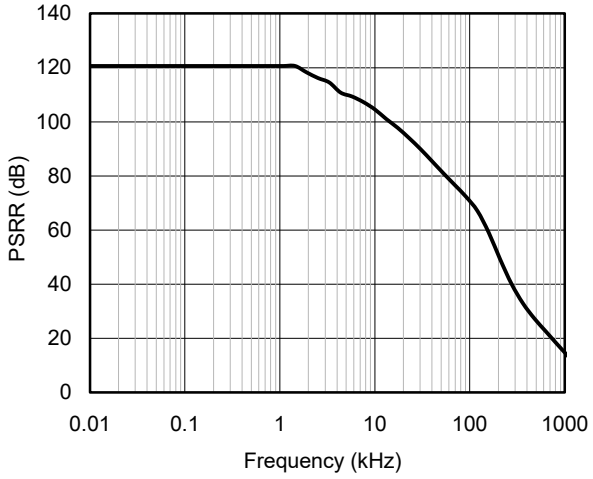

Gain vs. Frequency

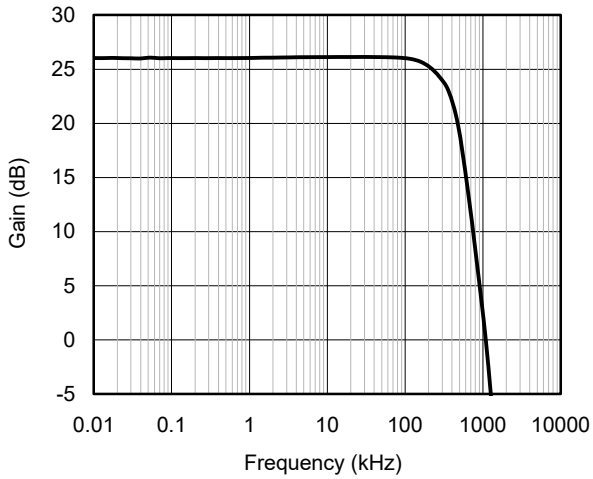

Input Voltage-Noise Density vs. Frequency

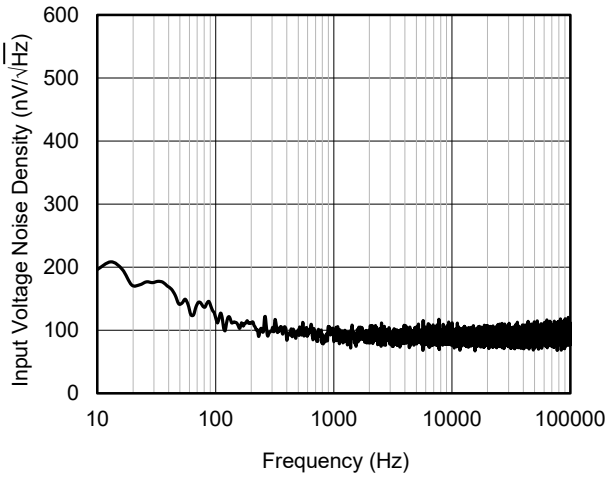

TYPICAL PERFORMANCE CHARACTERISTICS (continued)

V_{IN+} = V_{IN-} = 100V, V_{CC} = 3.3V, V_{SENSE} = V_{IN+} - V_{IN-} = 1mV, T_J = +25℃, unless otherwise noted.

Small Signal Step Response

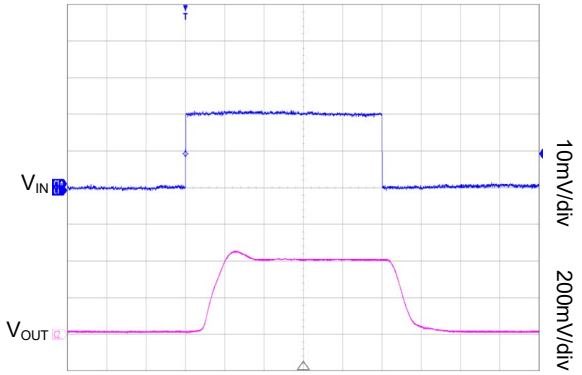

Time (2μs/div)

Large Signal Step Response

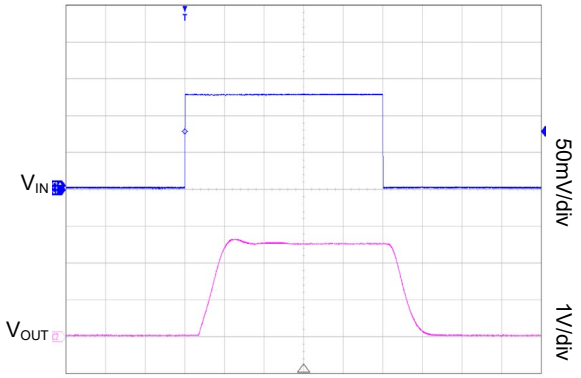

Time (2μs/div)

Saturation Recovery Response

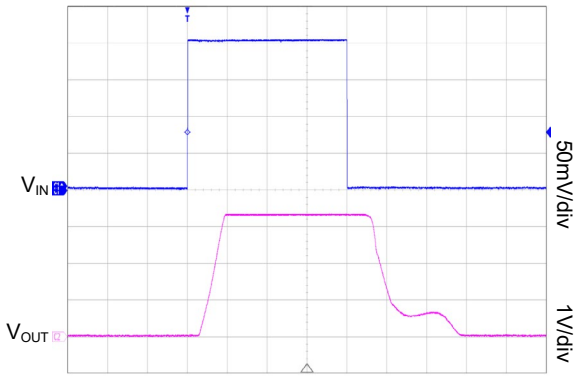

Time (2μs/div)

Output Voltage Ripple

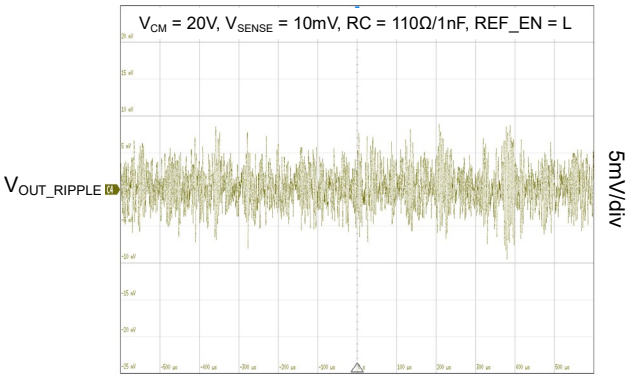

Time (100μs/div)

Output Voltage Ripple

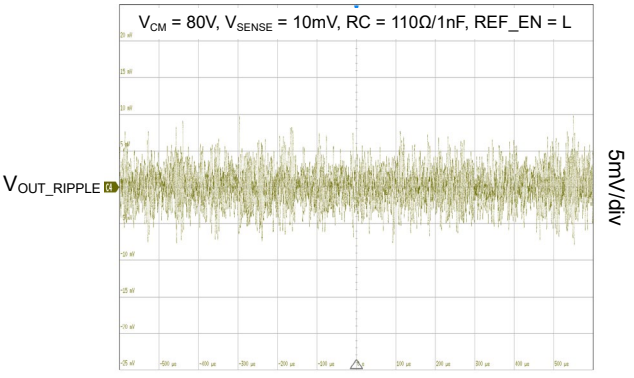

Time (100μs/div)

DETAILED DESCRIPTION

The SGM70835A can operate with either single-supply or dual-supply. For single-supply configuration, the device features a wide -4V to 120V input common-mode voltage range completely independent of the supply voltage. In the dual-supply configuration, the common-mode voltage range is shifted by the value of the negative voltage applied to the GND pin. For instance, with GND = -15V, the input common-mode voltage range is -19V to 105V. This function allows monitoring the current of the high-side power supply or the low-side ground wire. High-side current monitoring has a relatively strong grounding interference resistance, and does not interfere with the grounding path of the load under test, which makes SGM70835A particularly suitable for collecting high current under high voltage environment. The SGM70835A amplifies the voltage across the current-sense resistor, R_{SENSE}. The gain is 20V/V for the SGM70835A.

Operational Principle

Figure 3 shows the operational principle of the SGM70835A.

IN+ and IN- are high-side input voltage pins. Select a higher voltage between IN+ and IN- voltages through the V_{MAX} selection circuit as the high power rail of the internal operational amplifier. VCC is the low power rail of the internal operational amplifier to ensure its maximum output voltage.

Take channel 1 as an example, the resistor R_{SENSE} is set between IN1+ and IN1-. When the current flows from IN1+ to IN1-, a voltage drop (V_{SENSE}) occurs, and $V_{SENSE} = V_{IN1+} - V_{IN1-}$.

The SGM70835A integrates an operational amplifier inside with low V_{OS}, and the amplifier is connected as a proportional amplifier. The amplified V_{SENSE} voltage can be measured at the OUT pin. When REF_EN is connected to GND, the internal reference is disconnected from OUT1 (or OUT2).

$$V_{OUT1} = \frac{R_{11}}{R_{13}} \times V_{SENSE} \quad (1)$$

The load current value can be calculated by measuring V_{OUT1} and combining with the R_{SENSE} value.

$$I_{LOAD} = \frac{R_{13}}{R_{11}} \times \frac{V_{OUT1}}{R_{SENSE}} \quad (2)$$

When REF_EN is connected to VCC, an internal reference of 0.225V is added to OUT1 (or OUT2).

$$V_{OUT1} = \frac{R_{11}}{R_{13}} \times V_{SENSE} + 0.225V \quad (3)$$

The load current value can be calculated by Equation 4.

$$I_{LOAD} = \frac{R_{13}}{R_{11}} \times \frac{(V_{OUT1} - 0.225)}{R_{SENSE}} \quad (4)$$

In this way, the current flowing between IN+ and IN- can be detected.

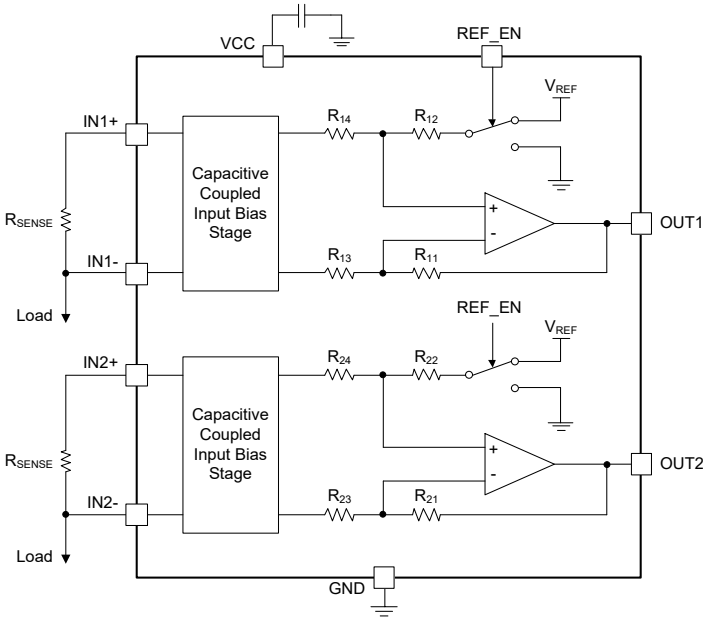

Figure 3. Typical Application Circuit

APPLICATION INFORMATION

Recommended Components Selection

The selection of appropriate parameters is usually required to establish the maximum load current on the current detection resistor to generate the full range detection voltage in the limiting application case. The gain is determined by generating the maximum output voltage of the application.

When REF_EN = 0, calculate V_{OUT} by Equation 5.

$$V_{OUT} = G \times V_{SENSE} \quad (5)$$

When REF_EN = V_{CC}, calculate V_{OUT} by Equation 6.

$$V_{OUT} = G \times V_{SENSE} + 0.225V \quad (6)$$

where:

V_{SENSE} is the sensing voltage;

G = 20V/V, it is the gain of the device.

It is important to ensure that R_{SENSE} dissipates its own I^2R losses in high-current monitoring applications. The power consumption of the resistor should be higher than its nominal value to prevent its value drift or fail completely. The SGM70835A has different sense resistance values to sense various currents.

The Sense Resistor Selection

Voltage Loss

High R_{SENSE} values result in reduced power supply voltage through infrared loss. It is recommended to use the lowest R_{SENSE} value to achieve minimum voltage loss.

Resistor Accuracy Control

The high R_{SENSE} value allows for more accurate measurement of low current. Because the offset will become less important if the detection voltage is large. For better performance, R_{SENSE} is selected to generate V_{OUT} close to the full-scale input of sampling ADC.

Inductance

If the sense current has a large high-frequency component, the inductance should remain as low as possible. Generally, the inductance of wire-wound resistors is the highest, and metal-film resistors are slightly better. Metal-film and low-inductance resistors are also available. The metal-film or wire-wound resistors are spiraled around the cores, while this resistor is a straight metal strip that can be found with values below 1Ω.

In order to avoid errors in the test voltage due to high current passing through R_{SENSE}, eliminating parasitic trace resistances should be considered. Using four-terminal current to detect resistance or using Kelvin (force and feel) PCB layout technology is the appropriate design.

Power Consumption and Efficiency Optimization

When selecting R_{SENSE} value and its rated power dissipation (wattage), its I^2R losses should be carefully taken into account because it is significant at high current levels. In addition, if the temperature is too high, the value of the sensor resistance may drift.

Layout Guidelines

Attention to good layout practices is always recommended.

The input pins should be connected to the sense resistor pads using a Kelvin (4-wire) connection. This technique ensures that the measurement is sensitive only to the voltage drop across the current-sensing element itself, excluding any voltage drops across the high-current traces. Improper routing can easily introduce parasitic trace resistance between the input pins, which, given the low resistance of the shunt, can lead to significant measurement inaccuracies.

As mentioned previously, the power-supply bypass capacitor (typically 0.1μF) must be positioned in immediate proximity to the VCC and GND pins of the device. This placement minimizes the inductance of the connection loop, ensuring effective filtering of high-frequency noise from the power supply.

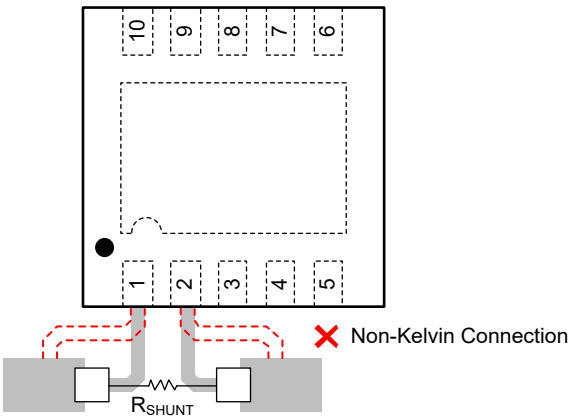

Figure 4. Shunt Connections to the SGM70835A

REVISION HISTORY

NOTE: Page numbers for previous revisions may differ from page numbers in the current version.

Changes from Original to REV.A (NOVEMBER 2026)	Page
Changed from product preview to production data	All

PACKAGE OUTLINE DIMENSIONS

TDFN-3×3-10L

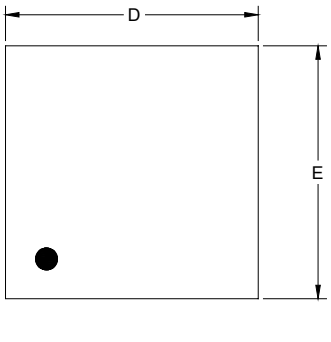

TOP VIEW

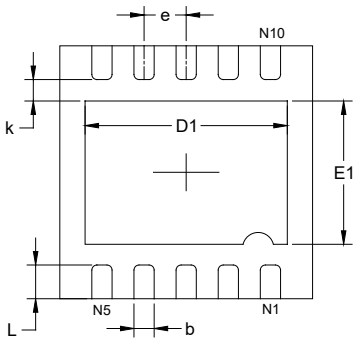

BOTTOM VIEW

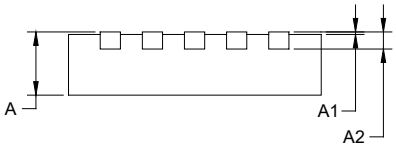

SIDE VIEW

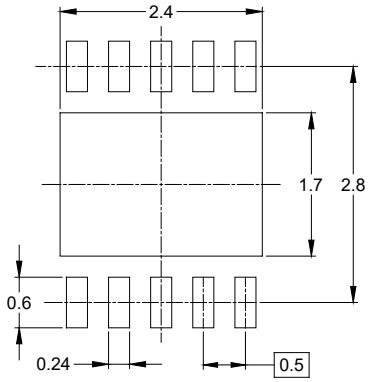

RECOMMENDED LAND PATTERN (Unit: mm)

Symbol	Dimensions In Millimeters		Dimensions In Inches	
	MIN	MAX	MIN	MAX
A	0.700	0.800	0.028	0.031
A1	0.000	0.050	0.000	0.002
A2	0.203 REF		0.008 REF	
D	2.900	3.100	0.114	0.122
D1	2.300	2.600	0.091	0.103
E	2.900	3.100	0.114	0.122
E1	1.500	1.800	0.059	0.071
k	0.200 MIN		0.008 MIN	
b	0.180	0.300	0.007	0.012
e	0.500 TYP		0.020 TYP	
L	0.300	0.500	0.012	0.020

NOTE: This drawing is subject to change without notice.

TAPE AND REEL INFORMATION

REEL DIMENSIONS

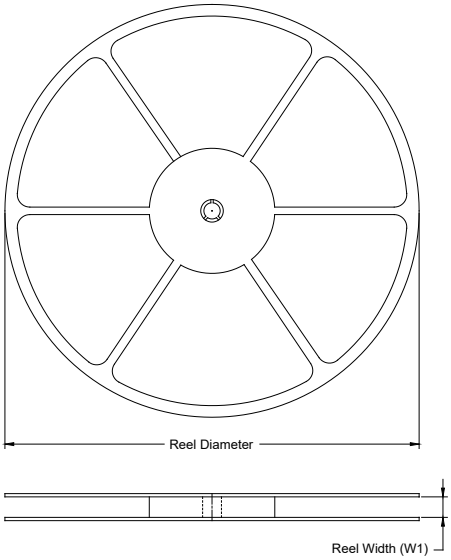

TAPE DIMENSIONS

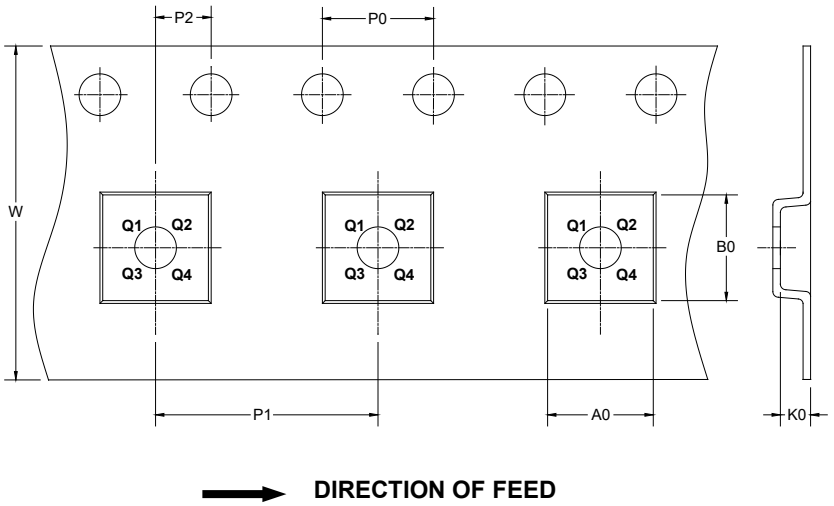

NOTE: The picture is only for reference. Please make the object as the standard.

KEY PARAMETER LIST OF TAPE AND REEL

Package Type	Reel Diameter	Reel Width W1 (mm)	A0 (mm)	B0 (mm)	K0 (mm)	P0 (mm)	P1 (mm)	P2 (mm)	W (mm)	Pin1 Quadrant
TDFN-3×3-10L	13"	12.4	3.30	3.30	1.10	4.0	8.0	2.0	12.0	Q2

DD0001

CARTON BOX DIMENSIONS

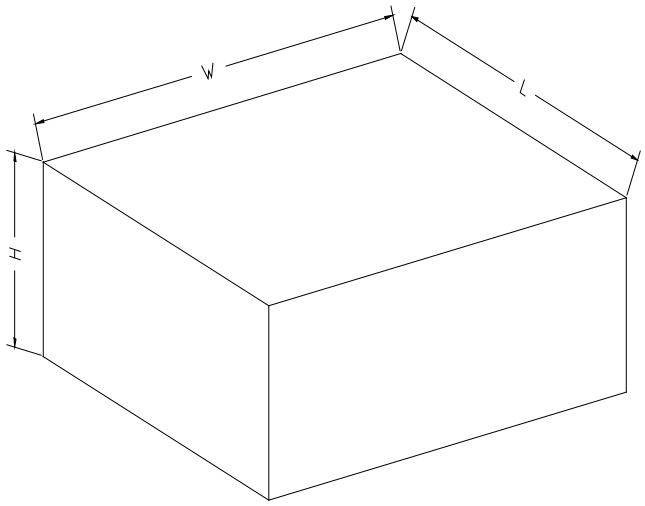

NOTE: The picture is only for reference. Please make the object as the standard.

KEY PARAMETER LIST OF CARTON BOX

Reel Type	Length (mm)	Width (mm)	Height (mm)	Pizza/Carton
13″	386	280	370	5

DD0002