SGM66056
Tiny, 2.2MHz, Fixed Output Synchronous Boost Converter with a 2.5A Switch

GENERAL DESCRIPTION

The SGM66056 is an internally compensated, 2.2MHz switching frequency, current mode, synchronous boost switching regulator. This device turns into power-save mode to maintain high efficiency by lowering switching frequency. Anti-ringing control circuitry reduces EMI concerns by damping the inductor in discontinuous mode. Its output is disconnected by the rectifier circuit during shutdown with no input to output leakage.

The SGM66056 is available in a Green WLCSP-1.21×1.21-9B package. It operates over an ambient temperature range of -40℃ to +85℃.

FEATURES

- **2.5V to 4.5V Operating Input Voltage Range**
- **5.0V Fixed Output Voltage**
- **5.7V Output Voltage Clamping**
- **93% Efficiency Synchronous Boost Converter**
- **34μA (TYP) Quiescent Current**
- **Less than 1μA Shutdown Current**
- **Improved Light Load Efficiency with Power-Save Mode (PSM)**
- **Load Disconnect during Shutdown**
- **Low Reverse Leakage Current when V_{OUT} > V_{IN}**
- **Over-Temperature Protection**
- **Available in a Green WLCSP-1.21×1.21-9B Package**
- **-40℃ to +85℃ Operating Temperature Range**

APPLICATIONS

Class-D Audio Amplifier
Smart Phones and Tablets
Portable and Wearable Devices
USB OTG Supply

PACKAGE/ORDERING INFORMATION

MODEL	V_{OUT} (V)	PACKAGE DESCRIPTION	SPECIFIED TEMPERATURE RANGE	ORDERING NUMBER	PACKAGE MARKING	PACKING OPTION
SGM66056	5.0	WLCSP-1.21×1.21-9B	-40℃ to +85℃	SGM66056-5.0YG/TR	C03 XXXX	Tape and Reel, 3000

MARKING INFORMATION

NOTE: XXXX = Date Code.

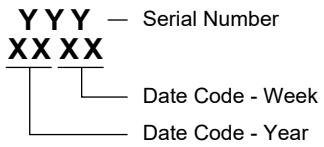

Green (RoHS & HSF): SG Micro Corp defines "Green" to mean Pb-Free (RoHS compatible) and free of halogen substances. If you have additional comments or questions, please contact your SGMICRO representative directly.

ABSOLUTE MAXIMUM RATINGS

Voltage on VIN Pin ..... -0.3V to 5.5V
Voltage on VOUT Pin 6V
SW Node (DC)..... -0.3V to 6V
SW Node (Transient: 10ns, 3MHz)..... -1V to 8V
Voltage on Other Pins..... -0.3V to 6V (1)
Package Thermal Resistance
WLCSP-1.21×1.21-9B, θ_{JA}. ..... 90℃/W
Junction Temperature..... +150℃
Storage Temperature Range ..... -65℃ to +150℃
Lead Temperature (Soldering, 10s)..... +260℃
ESD Susceptibility
HBM..... 4000V
CDM 1000V

NOTE: 1. Lesser of 6V or V_{IN} + 0.3V.

OVERSTRESS CAUTION

Stresses beyond those listed in Absolute Maximum Ratings may cause permanent damage to the device. Exposure to absolute maximum rating conditions for extended periods may affect reliability. Functional operation of the device at any conditions beyond those indicated in the Recommended Operating Conditions section is not implied.

ESD SENSITIVITY CAUTION

This integrated circuit can be damaged by ESD if you don't pay attention to ESD protection. SGMICRO recommends that all integrated circuits be handled with appropriate precautions. Failure to observe proper handling and installation procedures can cause damage. ESD damage can range from subtle performance degradation to complete device failure. Precision integrated circuits may be more susceptible to damage because very small parametric changes could cause the device not to meet its published specifications.

DISCLAIMER

SG Micro Corp reserves the right to make any change in circuit design, or specifications without prior notice.

PIN CONFIGURATION

(TOP VIEW)

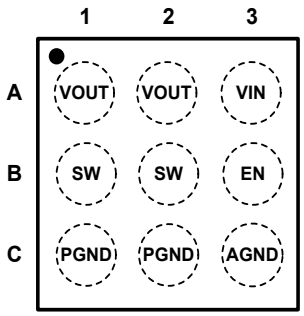

WLCSP-1.21×1.21-9B

PIN DESCRIPTION

PIN	NAME	FUNCTION
A1, A2	VOUT	Boost Converter Output.
A3	VIN	Power Supply Input.
B1, B2	SW	Switch Node. Drain connection of low-side power MOSFET.
B3	EN	Device Enable Node. Pulling this pin logic high enables the device, logic low disables the device
C1, C2	PGND	Power Ground.
C3	AGND	Analog Ground.

ELECTRICAL CHARACTERISTICS

(V_{IN} = 3.6V, Full = -40℃ to +85℃, typical values are at T_A = +25℃, unless otherwise noted.)

PARAMETER	SYMBOL	CONDITIONS	TEMP	MIN	TYP	MAX	UNITS
DC/DC STAGE							
Input Voltage Range	V_{IN}		+25℃	2.5		4.5	V
Switching Frequency	f		Full	1.80	2.20	2.55	MHz
Switch Current Limit	I_L		+25℃	1.85	2.5	3.5	A
Boost Switch On-Resistance		V_{OUT} = 5.0V	+25℃		50	65	mΩ
Rectifying Switch On-Resistance		V_{OUT} = 5.0V	+25℃		60	80	mΩ
Output Voltage		SGM66056-5.0	Full	4.96	5.06	5.18	V
Line Regulation		V_{IN} = 2.5V to V_{OUT} - 0.5V	+25℃		0.1		%
Load Regulation			+25℃		0.3		%
Quiescent Current	I_Q	V_{EN} = V_{IN} = 3.6V, not switching	+25℃		34	53	μA
Shutdown Current		V_{EN} = 0V, V_{IN} = 3.6V	+25℃			1	μA
CONTROL STAGE							
EN Input Low Voltage	V_{IL}		Full			0.4	V
EN Input High Voltage	V_{IH}		Full	1.3			V
EN Input Current		Clamped to GND or VIN	Full	-1		1	μA
Over-Temperature Protection					150		℃
Over-Temperature Hysteresis					20		℃

TYPICAL PERFORMANCE CHARACTERISTICS

At T_A = +25℃, V_{IN} = 3.6V, C_{IN} = 4.7μF, C_{OUT} = 20μF, unless otherwise noted.

Efficiency vs. Load Current

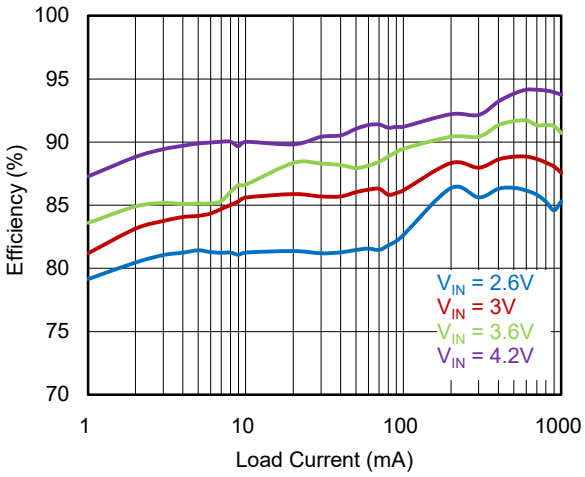

Maximum Output Current vs. Input Voltage

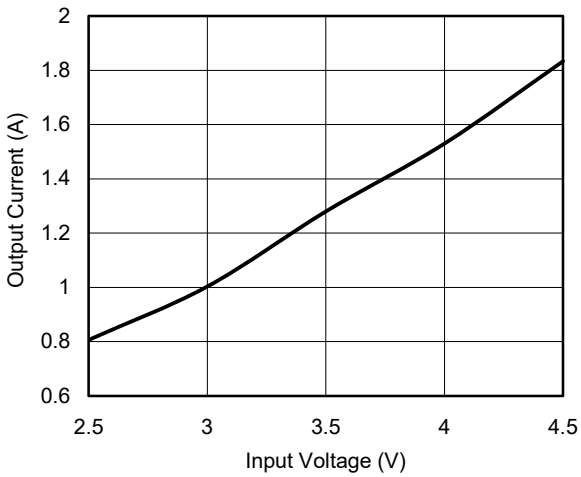

Load Transient Response

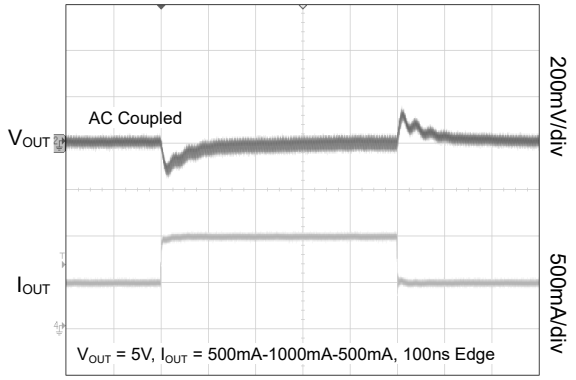

Time (20μs/div)

Load Transient Response

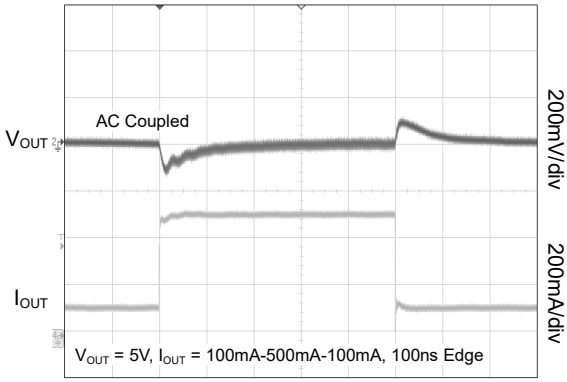

Time (20μs/div)

Line Transient Response

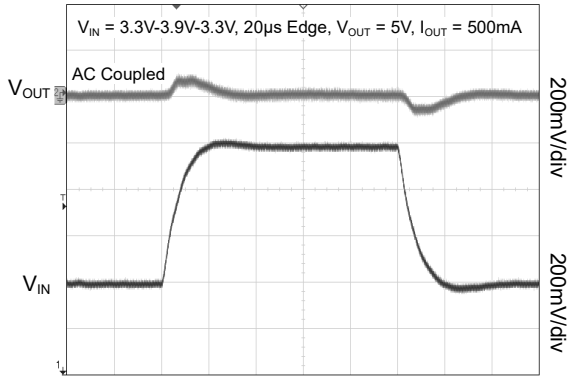

Time (20μs/div)

Simultaneous Line/Load Transient Response

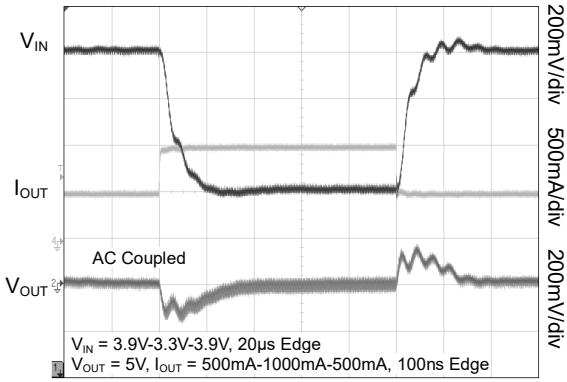

Time (20μs/div)

TYPICAL PERFORMANCE CHARACTERISTICS (continued)

At T_A = +25℃, V_{IN} = 3.6V, C_{IN} = 4.7μF, C_{OUT} = 20μF, unless otherwise noted.

Start-Up after Enable

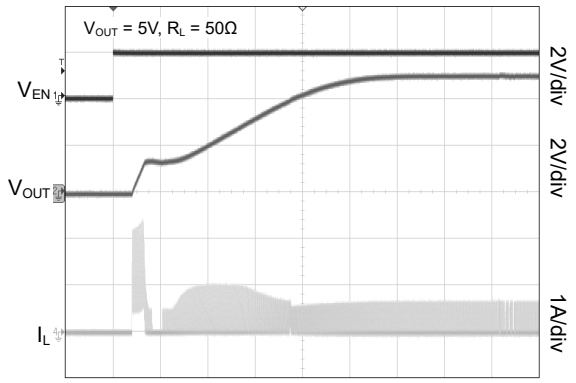

Time (100μs/div)

Output Short Protection

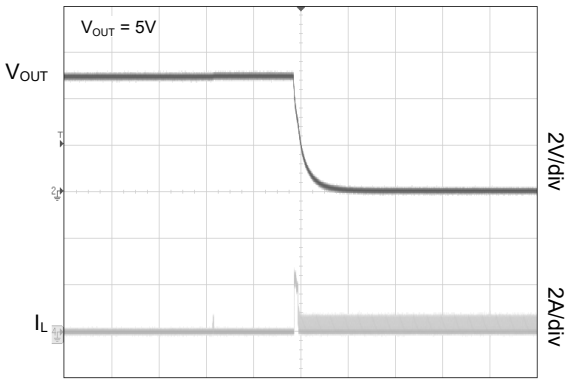

Time (100μs/div)

Switching Waveform at Heavy Load

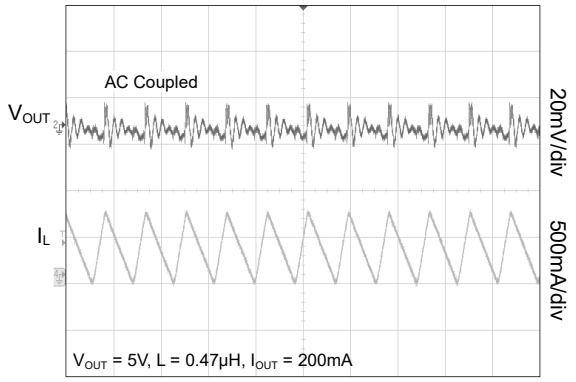

Time (500ns/div)

Switching Waveform at Light Load

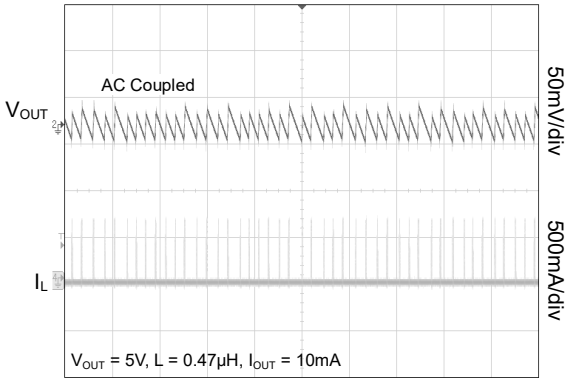

Time (100μs/div)

FUNCTIONAL BLOCK DIAGRAM

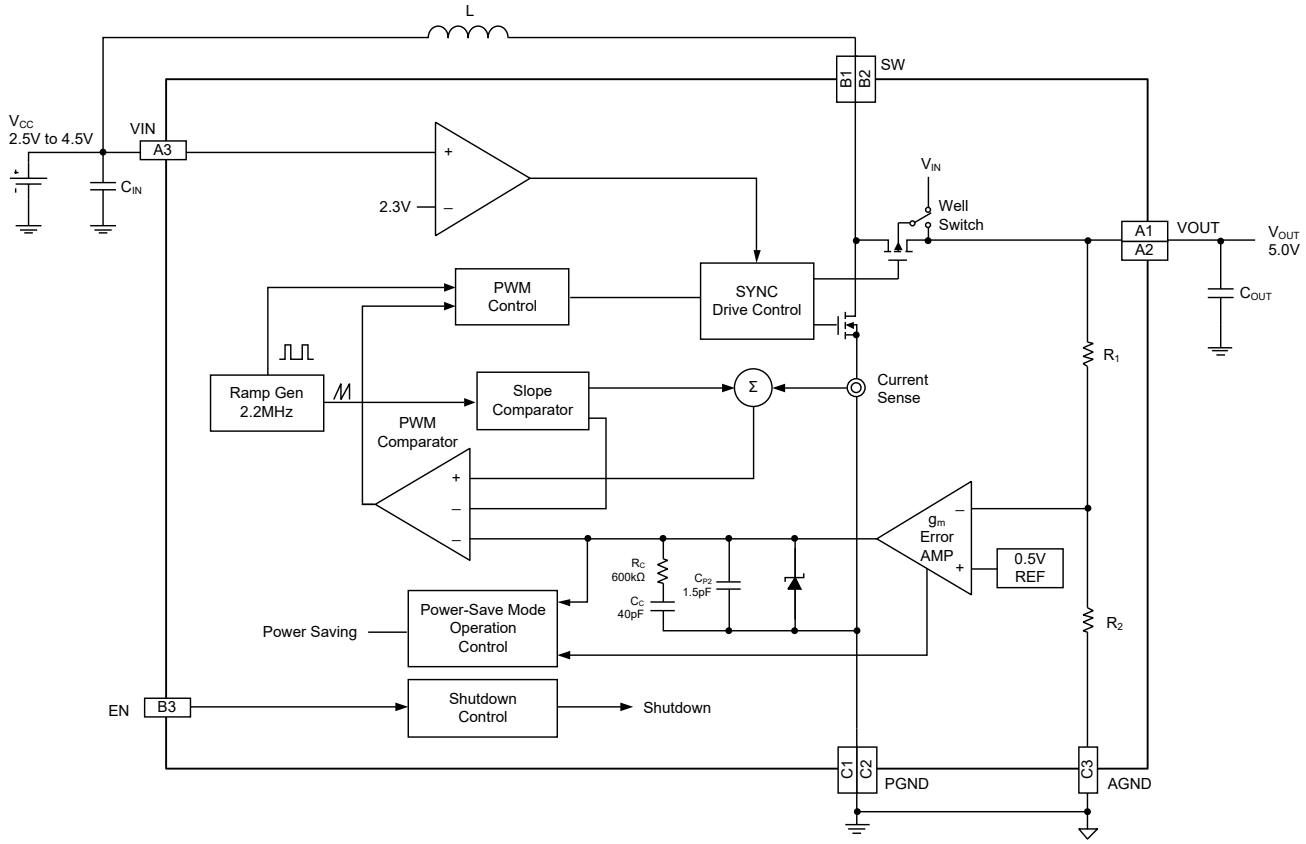

Figure 1. Block Diagram

REVISION HISTORY

NOTE: Page numbers for previous revisions may differ from page numbers in the current version.

Changes from Original (JULY 2019) to REV.A	Page
Changed from product preview to production data	All

PACKAGE OUTLINE DIMENSIONS

WLCSP-1.21×1.21-9B

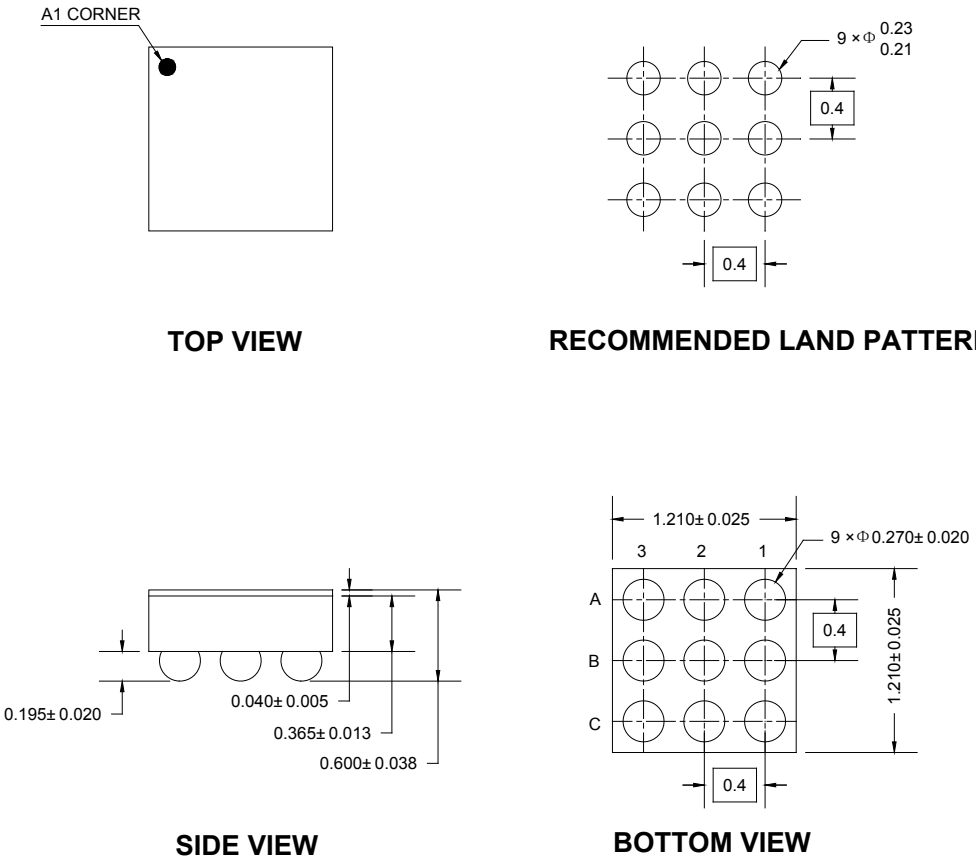

NOTE: All linear dimensions are in millimeters.

TAPE AND REEL INFORMATION

REEL DIMENSIONS

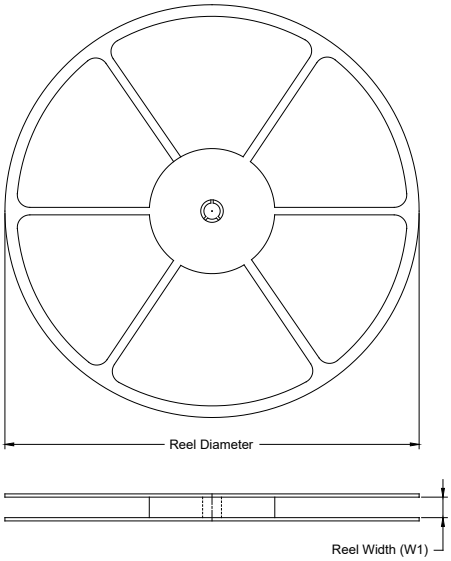

TAPE DIMENSIONS

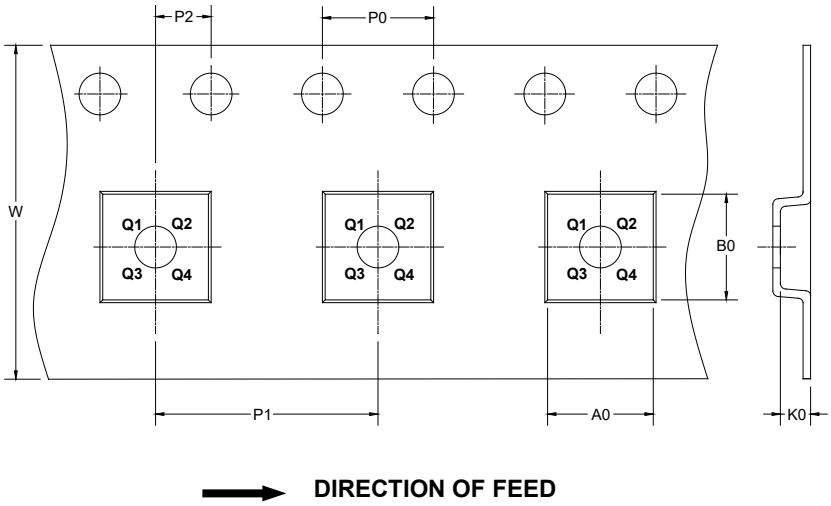

NOTE: The picture is only for reference. Please make the object as the standard.

KEY PARAMETER LIST OF TAPE AND REEL

Package Type	Reel Diameter	Reel Width W1 (mm)	A0 (mm)	B0 (mm)	K0 (mm)	P0 (mm)	P1 (mm)	P2 (mm)	W (mm)	Pin1 Quadrant
WLCSP-1.21×1.21-9B	7″	9.2	1.33	1.33	0.74	4.0	4.0	2.0	8.0	Q1

DD0001

CARTON BOX DIMENSIONS

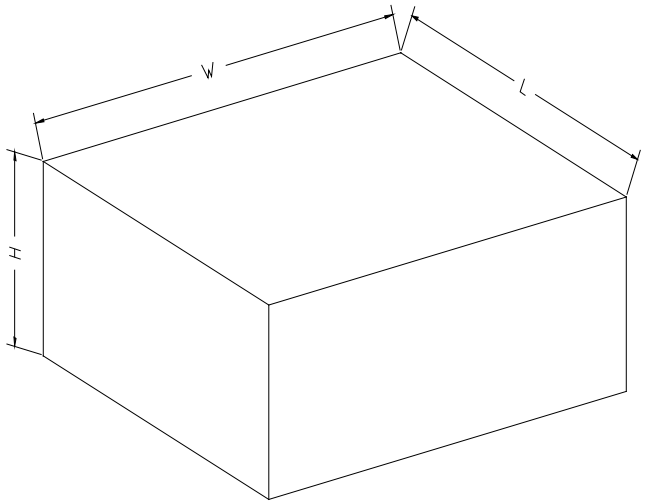

NOTE: The picture is only for reference. Please make the object as the standard.

KEY PARAMETER LIST OF CARTON BOX

Reel Type	Length (mm)	Width (mm)	Height (mm)	Pizza/Carton
7″ (Option)	368	227	224	8
7″	442	410	224	18

DD0002